Using Ex-Service Radio Apparatus

2/6

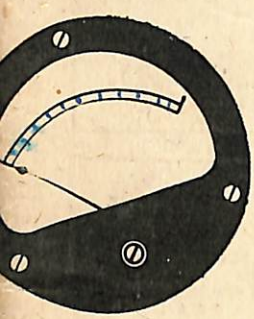

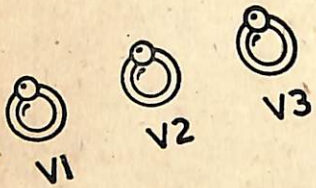

by DONALD W. THOMASSON

BERNARDS RADIO MANUALS ★ No. 81

OPPORTUNITIES IN RADIO

Get this FREE Book !

"ENGINEERING OPPORTUNITIES" reveals how *you* can become technically-qualified at home for a highly-paid key-appointment in the vast Radio and Television Industry. In 108 pages of intensely interesting matter it includes full details of our up-to-the-minute home-study courses in all branches of **RADIO AND TELEVISION, A.M.Brit. I.R.E., A.M.I.E.E., City and Guilds, Special Television, Servicing, Sound Film Projection, Short Wave, High Frequency, and General Wireless Courses.**

We definitely guarantee

"NO PASS — NO FEE"

If you're earning less than £10 a week this enlightening book is for **you.** Write for your copy today. It will be sent **FREE** and without obligation.

BRITISH INSTITUTE OF ENGINEERING TECHNOLOGY

570 SHAKESPEARE HOUSE, 17, STRATFORD PLACE, LONDON, W.1.

Phone : MUSeum 9594.

H. FRANKS

58, NEW OXFORD ST., LONDON, W.C.1

We have a large assortment of various Ex-W/D Radar and Radio Equipment, Relays, Power Packs, Oscillograph Units, Gears, Photographic Apparatus, available

comprising—R.A.10 receivers; Selsyn motors K20, aerial cameras, heavy duty l.f. chokes, change-over relays as used in 1154 transmitter, 4000v 200ma transformers, multi-way screened cable and plugs, test sets fitted with C.R tubes; C.R. power units, type 526; performance meters type 53874; a.c. mains wavemeters, type W125; battery wavemeters, type W1095; receivers, type 1147; a.c. mains power packs for 1147; indicator modulators, auto transformers; receivers, type 76A; battery driven amplifiers, large asortments of volt, amp and milliammeters, neutralising units with R.F. meters, metal rectifiers, relays, vibrator packs, inter-com. sets, signal generators, d.c. to a.c. convertors; 12 and 24v d.c. to 230v. a.c. Sun Vic delayed action control, 3,500watts, blower motors, G.E C. gas-filled mercury relays; Brown's A type headphones; E.M.I. cathode-ray tubes; 6-valve receivers incorporating Clystron units, etc.

A visit to our premises will not be in vain. We are one minute from Tottenham Court Road Station. S.A.E. for Lists.

EX-GOVERNMENT APPARATUS—

Our stock is varied and too numerous to list here. New lines are constantly arriving. Send 3d. now for our latest Bargain List "C.M."

NEW APPARATUS—

Our 60 page printed and fully illustrated catalogue contains over 1,000 amateur lines by the leading Component Manufacturers as well as much helpful technical data. Send 9d. now for a copy.

SOUTHERN RADIO & ELECTRICAL SUPPLIES

85, FISHERTON STREET, SALISBURY, WILTS.

Telephone : Salisbury 2108

USING EX-SERVICE RADIO APPARATUS

by

DONALD W. THOMASSON

(*E.A.R.L., Exeter*)

USING EX-SERVICE RADIO APPARATUS

By

DONALD W. THOMASSON

(*E.A.R.L., Exeter*)

BERNARDS (Publishers) LTD.

LONDON

First Published 1949

A. W. Duncan & Co. Ltd. Liverpool

CONTENTS

		Page
Introduction		7
Chapter		
I.	Choosing the Apparatus	9
II.	Stripping Down	12
III.	Power Supply Units	14
IV.	Test Gear	21
V.	Cathode Ray Tubes	29
VI.	Oscilloscopes and Television Apparatus	38
VII.	Communications	46
VIII.	Valves	48
	Service Valves and their Commercial Equivalents	56
	Conclusion	68

Introduction

The greatest source of supply for amateur radio experimental apparatus at the present time is undoubtedly the ex-service surplus market. For relatively small sums of money it is possible to obtain large quantities of apparatus that originally cost many times as much, and would, in any case, be almost impossible to buy in the normal way. The surplus shops have become the haunt of all home experimenters, and some of the professional laboratories find a use for the goods they have to offer, so great is the value of the apparatus available.

There is, however, a snag in this paradise. The components are generally marked in service codes, which mean nothing to the civilian. The valves tend to be of exotic types, unfamiliar to the eye, and lacking any clear identification of their normal identity. From every chassis purchased, it is common to find that as many parts have to be laid aside to await identification as can be used at once.

The present notes have been compiled to help to overcome this difficulty. They show how components may be recognised or identified, and give detail of suitable test apparatus and other gear which can be made up from ex-service components. An outline is also given of the type of apparatus which can be found in various types of ex-service sets, and, which is more to the point, of the items which are rarely encountered.

No attempt has been made to give detailed conversion data in connection with any one type of equipment available. This would be wasted if that particular equipment could not be obtained by the reader. Instead, the general lines on which selection of units should be based are given, with indications of the best type to buy for particular purposes.

Items of equipment not described are generally those for which full information is either not available, or is still secret. It is a strange fact that several of the equipments available are not completely off the secret list. In such cases the secret parts are generally removed, unless they are of such a nature that the secret features are not discoverable by testing.

A last word. If little is included on ordinary receivers and components suitable for them, it is because the information is not as widely needed. The space saved is devoted to matters of greater general interest.

Chapter One

CHOOSING THE APPARATUS

"First catch the hare . . ." Mrs. Beeton was dealing with a recipe for jugged hare when she wrote that but the remark applies equally well to the present subject. The apparatus must first be bought. If the buying is done wisely and well, there is a far greater prospect of success than if the purchase is made at random, perhaps because the chassis looks well filled with components.

The selection process is determined largely by the immediate requirements of the purchaser, which may be indicated by information given in later chapters. It is unusual to be able to get all that is wanted from one chassis, and two or more may be needed, and still some odd parts may be lacking. Even then, the buyer will have saved a good deal on the normal market price. To make the utmost saving possible, it will help to know what kind of components he is likely to find on a given type of chassis.

There are many and enough different types. They fall into two main classes: the communication set and the radar unit, both of which may be further classified as equipment for ground use or mobile gear for use in a tank or aircraft. Finally, the apparatus may be British or American.

The British sets are generally finished in blue or grey (R.A.F.) or khaki (Army). The Americans are not so conservative, and use black crackle, an olive green not unlike khaki, and other colours. Air-sea rescue equipment may be recognised by its bright yellow.

Internally, the difference is most noticeable with the valves. The American identification code is well known, and helps here, while a taste for the black metal-enclosed type of valve is noticeable. Many British equipments are recognisable by the presence of a valve of the EF50 family; often several in a row. Another familiar British type is the VR65 and its variants. Finally, British apparatus generally bears a recognisable A.I.D. stamp.

Emphasis has been placed on the differences between British and American equipment because the two do not mix. It is not that one is better than the other, but is mainly due to different ideas on the way to make things. Valve bases are different, and so on. If British apparatus is already in use, it is best to get more of it than to try to combine American gear with

it. An exception arises in the case of the many types of equipment which are of British design but American manufacture. (The reverse case is very rare).

It is not always easy to see the difference between Radar and Communication equipment. Apart from the display units, which contain, or have contained, cathode ray tubes, the general design may be very similar. Reference numbers help little, though in the case of R.A.F. gear, R 1 - - - is usually a communication set (*e.g.*, R1155) while R 3 - - - is generally a radar set (*e.g.*, R3136 ; Monica).

The general rule for distinguishing mobile apparatus from ground equipment is that the former is generally fitted with quick-release fastenings to enable it to be changed quickly, and is more lightly built. Mobile equipment is very often fitted with multi-core cable connectors of the screw-in type, while ground equipment is more often self-contained.

So much for the visual identification. Now some notes may be given on components to be found in each type of unit.

The radar units yield the most highly specialised components of any type of unit, and should therefore be regarded as mainly useful where certain specialised components are required. The resistances and condensers are generally numerous, especially in pulse generator units, which may be identified by their rows of identical valves with complicated resistance capacity couplings. High voltage condensers and high value variable resistances are the components which are peculiar to display units.

Another type of radar unit is the IFF set. This is often built on a central double-sided chassis, with a motor generator assembly on one side, and the set proper on the other. The main value is in the motor generator unit and the valves. The components are relatively few in number and not of widely usable values.

The communication sets may in many cases be used for their original purpose without extensive alteration. This applies mainly to the so-called 'Medium and High Frequency' sets such as the R1155. The VHF sets can be recognised by the small dimensions of the tuning components, and are usually equipped for pre-set remote controlled tuning, which makes them unsuitable for direct adaptation. They yield large quantities of useful components, however, and are often good value.

The greatest disadvantage of mobile equipment, which forms the bulk of the apparatus available, is that any power transformers used are almost invariably designed to operate on an 80 volt 2,000 c/s input. Such transformers cannot be rewound to operate in the same circuit at 200v. 50 c/s input, as their core area is far too small. Again, if a suitable replacement transformer is available, it cannot be fitted in place of the original, as there is no room for it. In addition to this, the smoothing circuits are designed for operation at the higher frequency, and have to be modified before they can function properly at the normal mains frequency.

This difficulty is best overcome by using a separate power pack. Some suitable designs will be described in chapter three. As far as selection of

apparatus is concerned, the point to remember is that mobile gear rarely contains any power pack equipment which is of direct use. The transformers can be used in certain audio frequency applications with some success, but that does not provide alternative transformers to fill the gap.

One of the most important points in selecting gear is the number of valves in the unit. Some dealers fix their prices on a basis of so much per valve, the unit being generally about 5/-. There are several reasons for this. The valves are difficult to obtain, and are " consumable " items, and therefore are in constant demand. The retail prices of valves vary between 7/6 and 25/-, plus purchase tax. As the valves in surplus gear can be removed from their sockets without damage, whereas most other components are liable to deteriorate in the 'stripping' process, their value is not much below that of equivalent new valves.

Especial notice should therefore be taken of the numbers and types of the valves when choosing equipment. From the data given on valves at a later stage, it will be seen that the most useful general purpose types are the EF50, the VR65 and the 6SN7. In some equipments there are as many as fifteen or more of one of these, and such units are good value at £4 odd, even if the rest of the parts are not readily usable.

A final warning should be given regarding microwave gear. This is generally identifiable by the waveguide 'plumbing', in the form of small rectangular tubes. There is usually a magnetron or klystron type of valve in the assembly. The former may be identified by the powerful magnet used with it, the valve being a flat disc with cooling fins mounted between the poles of the magnet. The klystron consists of a metal centre unit mounted in a tunable resonance chamber, with glass tubes on each side. The glass tubes are some two inches in length, one terminating in an anode cap connector and the other in an octal base.

Where any of these appear in a unit, the value to the average experimenter of the components and apparatus in that unit is probably low. It is unlikely that many amateurs are interested in microwave apparatus as such, and there is no point in collecting a mass of components which are only useful as museum pieces.

To summarise, the points to watch are the valves (number, type, and condition), country of origin, class of equipment and general type of circuit used. The value marked on the price ticket does not always bear a sensible relation to the value to the buyer, and some of the most useful equipments are strangely low in price.

Choose well, with your requirements in mind, and you will get value for your money. Random buying rarely pays.

Chapter Two

STRIPPING DOWN

Having selected, purchased, and brought home a suitable unit, the unwanted parts must be removed so that the parts that are required can be made available for their intended use. This process, usually called 'stripping,' should be carried out with considerably more care and attention than its name implies. It is possible to do a tremendous amount of damage to components by removing them carelessly, and it is, in fact, by no means easy to remove them without any damage at all.

It is well worth while to consider the matter in detail before starting. In very few cases can the chassis be used without considerable modification, but that is no reason for taking everything off it in order to start with a clean sweep. The planning of the final layout should be deferred until the chassis is available, so that as much advantage as possible can be taken of the existing arrangements. This will save time, and reduce component damage considerably.

Having decided on the parts that must be removed, the soldering iron may be switched on and the cutters and screwdrivers put ready. Another tool of considerable value in this work is a pair of thin-nosed pliers, which can be used to untwist 'cleated' joints. These are the bane of everyone who has had to strip or repair service equipment. The standard specifications lay down, with wisdom, that all soldered joints shall be electrically and mechanically sound. In order to ensure that this requirement is met, the wire is twisted round and even through the tag before soldering. When the wire has to be removed, it is impossible to reverse the process, and the wire has to be disentangled while the solder is hot.

The fact that this is a difficult process is no excuse for cutting the leads away from the tag, which is often the solution chosen. The distance between the component and the tag is generally very small, and it is very awkward to try to solder the resulting short wire to a tag when the time comes to use the component again.

The process requires patience, and it is best to remove tag-boards as complete units, taking off the single components as they are required.

It is in stripping down that the difficulty of identifying components begins to arise. This can be overcome to some extent by careful point-to-

point testing, coupled with a certain amount of radio common sense. Another useful indication is the colour code and it must not be forgotten that this is used for condensers as well as resistances, the capacity in $\mu\mu$fd. being given in the same way as the resistance in ohms.

Mysterious boxes with no markings are generally blocks of condensers or transformers. If several condensers are combined in this way, the common lead generally goes to earth, and should be marked before removal from the chassis. It is easy enough to find out whether the component is a condenser block or a transformer by continuity testing when the leads have been removed, and the precise component values may be found with the test instruments described in later chapters.

A point worthy of note is the habit of making RF chokes in VHF gear by winding a layer of wire on a high value resistance.

Certain components may be discarded without detailed consideration, and it is as well to remove these first. The power transformers in all mobile equipments, together with the smoothing circuits, are a good example, and the plugs and sockets run a close second. Some connectors can be used, but it is not often possible to buy equipment fitted with both plugs and sockets, and such fittings must therefore be discarded, or laid aside until they can be matched by plugs and sockets from connection harness sets, which are sometimes available.

A fact that causes a good deal of trouble is that the length of the control spindles on ex-service gear are only suitable for the thin metal panels on which the controls are fitted. It is likely that these will join the transformers and the connectors in the junk box if any other type of panel is to be used. It is therefore advisable to sacrifice appearance for economy where panels are concerned.

Careful selection of components and careful stripping will be well repaid by the increased value obtained from the apparatus. The value is in the parts, not the whole, and if the parts are not used fully, money is wasted.

Chapter Three

POWER SUPPLY UNITS

Before any experimental work can begin, the necessary power supplies must be available. It has been noted that these are not generally obtainable in the form of ex-service gear, though some parts may be obtained thus, and the units which will be described are therefore based on commonly available components. The cost of building these units is not great, and all possible simplifications consistent with good performance are included.

In general, it is not advisable to run the valve heaters of experimental apparatus in series, as is done in an AC/DC receiving set, and the minimum requirement is therefore a heater transformer. This can be made by re-winding a transformer of the 2,000 c/s type, though it must be noted that such rewinding needs heroic patience if it is to be carried out properly without a winding machine. If the reader doubts his own patience, he would be well advised to either get the transformer rewound by a firm specialising in the work, or buy a new transformer for the purpose. There are some excellent heater transformers on the market, giving alternative outputs of 4, 5 or 6.3 volts and costing about 35/-.

For the braver ones, the following data will help to ease their difficulties. The rewinding process is begun by removing all the original windings. The heavy low tension windings may be discarded in most cases, as they will be far too short to be used for 50 c/s low tension windings. The input and high tension windings may be used again if they can be removed without many breaks, which will be unusual, because they are interleaved with paper, which catches on the wire as it is taken off.

On the whole, it is better to assume that the wire cannot be salvaged, and remove it by cutting with a hack-saw. This will make removal of the stampings easier. They are very difficult to extract when the winding is complete because of the varnish impregnation. When removed, they should be measured to determine the maximum possible wattage. With average laminations, the maximum wattage is about 30 times the square of the cross sectional area of the centre limb (in square inches). A cross section of 1.4 square inches will therefore be adequate for 60 watts, while 100 watts needs about 1.85 square inches.

The cross sectional area of a 2,000 c/s transformer is generally of the

order of 1.25 square inch, which allows a maximum of about 47 watts. This will be adequate for most purposes, allowing one output of 5 volts at 2 amps, and two of 4 or 6.3 volts at 2 amps each. In this case the primary for 200 volts 50 c/s should be wound in 28 S.W.G. wire, preferably enamelled, and should consist of 1,400 turns. The 5 volt secondary will require 36 turns of 18 S.W.G. and the other output windings 45 turns of 18 S.W.G. wire each, with tappings at the 29th turn.

The primary winding should be put on first, starting with a former made to fit the centre limb of the core. This should be covered with a layer of very thin paper, and a single layer of wire wound on, making sure that the turns do not cross each other at any point. This layer should be covered with another layer of paper, and the process repeated until the winding is complete. The ends may be brought out to a tag board, or, better, may be soldered to leads which are securely anchored to the winding, thus removing all strain from the winding itself when the leads are being connected up (see Fig. 1). The paper used for interleaving should be thin but tough. A suitable source of supply may be found in any house, generally in the form of a perforated roll.

When the primary is complete, the top layer should be covered with impregnated tape, such as empire cloth or insulating tape. The secondaries may now be added, the ends being anchored in the manner shown in Fig. 2. These heavy wires should be brought out to a tag board or connected directly into the circuit.

When the winding is complete, it may be coated with hot wax. Paraffin wax may be used, though it is not ideal. It may be poured over the transformer, or the transformer may be dipped into molten wax. In the latter case it is better to insert and clamp the laminations first, so that they also get the benefit of the sealing action of the wax. This process protects the transformer from damp to some extent. More important, it reduces the chances of the windings moving out of place. If the dipping process is used, precautions should be taken against the wax becoming ignited, and the temperature should be as low as possible.

The laminations should be inserted in pairs, the alternate pairs being inserted in opposite directions, to reduce the effect of the gaps between opposite irons. They should be securely clamped to avoid lamination buzz and consequent power wastage. The original transformer will probably be fitted with clamps suitable for this purpose.

When complete, the transformer may be tested, the cautious experimenter including a fuse in the primary circuit. The primary current with no load should not be greater than about 30-40 mA. If it is greater, check the tightness for the laminations. In some cases the iron used is of such a quality that the no-load current is greater, but it should be as small as possible, since the wattage consumed with no load is lost, and the primary has to take this wattage in addition to the power drawn from the secondaries.

The secondaries should be tested under full load conditions. On open circuit, with only a voltmeter across them, the output will be slightly high,

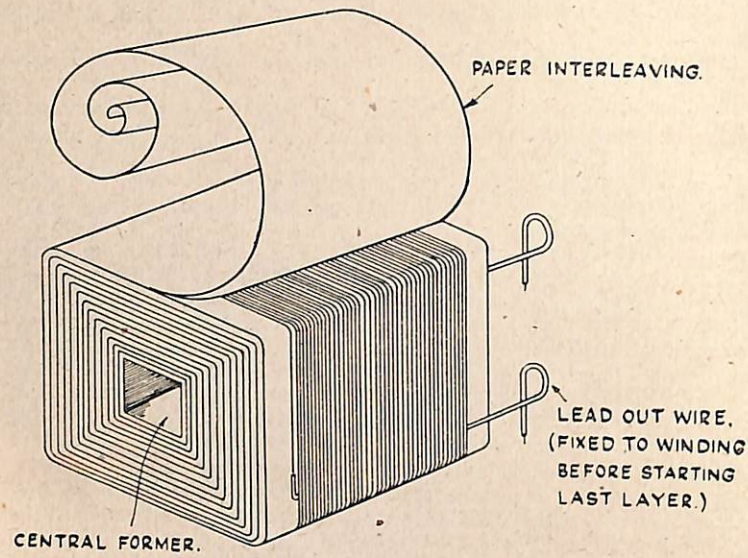

Fig. 1. *Transformer winding : high voltage*

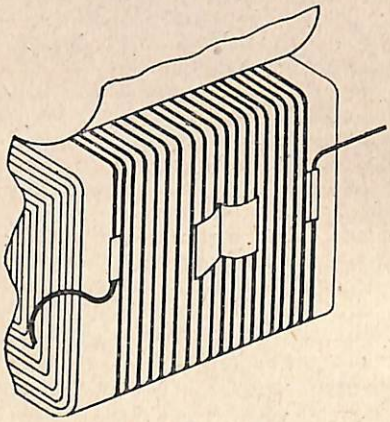

Fig. 2. *LT winding*

while the full load voltage should be on the low side, so that the nominal voltage is obtained on about half load.

The transformer thus described may be varied to suit individual requirements. The following rules will assist the design of other transformers. If the core area is greater or smaller than 1.25 square inches, the wattage will vary accordingly, being proportional to the square of the area. The number of turns will also vary being inversely proportional to the area. The design given is based on a figure of 7 turns per volt. If the core has a cross section of 1.5 square inches, the figure may be reduced to six, while a core of 1 square inch requires 9 turns per volt. The secondary wire gauges depend on the output current required, and the primary gauge depends on the total wattage. The proper sizes can be found from wire tables.

The heater transformer described will supply a rectifier, from the 5 volt winding, and two 4 volt or from four to six 6.3 volt valves from each of the other windings. It may be built into a power pack to provide HT, so that the one power unit may be used with a number of different pieces of apparatus as required.

The HT supply circuit may be fed directly from the mains, as shown in Fig. 3, but it is better to use a proper feed transformer. This may be built up from another 2,000 c/s transformer, or a suitable transformer purchased. If the latter course is taken, it will be best to buy a transformer with combined HT and LT supplies, as the cost of this is less than the cost of separate transformers. It is often convenient to have separate HT and LT transformers, however, especially in high voltage equipment, where the insulation between windings has to be particularly high. It also permits independent primary switching of the two supplies, so that the HT may be removed for adjustments without allowing the heaters to cool off.

Using a similar core to the one assumed for the LT transformer, a suitable HT design is as follows. The primary should be wound with 1,400 turns of 32 S.W.G. enamel with paper interleaving as before, and the secondary should be wound with 4,000 turns of 34 S.W.G. tapped at 2,000 turns. This will give a nominal 280 volts at about 70 mA.

The circuit using this transformer is shown in Fig. 4. It is the normal full wave circuit, and no comment is necessary.

A power unit built up from these transformers, with suitable rectifier and smoothing circuit, will be adequate for practically any type of experimental gear, with the exception of cathode ray tubes. Some notes will therefore be added on power units suitable for HT supply of the types of tube encountered in ex-service equipment.

The HT required varies between 800 volts and 6,000 volts. The current drain is small, being of the order of a milliamp in most cases. These figures suggest the use of the cascade doubler, a circuit of considerable value in such cases, which has been strangely neglected in text book expositions.

The circuit was developed by Cockcroft and Walton from the half wave rectifier shown in Fig. 3. The first stage in the development is shown in Fig. 5a, where two half wave rectifiers are arranged so that their output

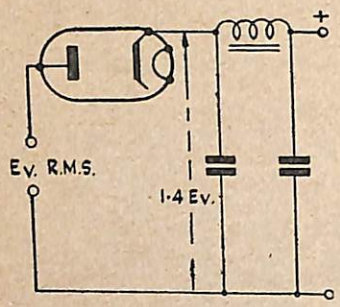

Fig. 3. *Half-wave rectifier*

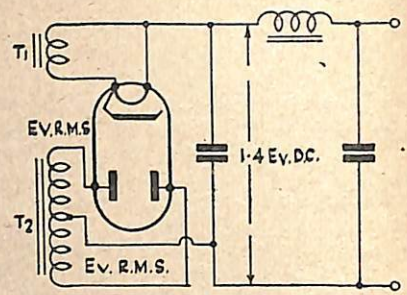

Fig. 4. *Full-wave rectifier*

voltages are added. The lower rectifier is fed from the transformer in the normal way via C1. The upper rectifier is fed via C1 and C2. The next stage in the development is shown in Fig. 5b. Here a second doubler circuit has been added, so that twice the voltage may be developed with the same input. The principle was extended in a similar way by the originators so that the ultimate output was 600,000 volts.

There is no need to go to these lengths for cathode ray tube supplies. The value in this case lies in the fact that the final output is many times the input voltage. In the quadrupler of Fig. 5b, the output with low current drain is four times the peak voltage of the applied AC. With an input of 350 v R.M.S., an output of nearly 2,000 volts may be obtained. The output will fall off rapidly with increasing current, however, and the drain should be kept as low as possible.

The rectifiers should be of the barrier, or "dry" type, since heater supplies would give rise to some difficulty. A quadrupler circuit has been built up with valves of the 6H6 type, and this gave 1,000 volts from an input of 180 volts R.M.S. but the practice is not recommended. The feed condensers should be as large as possible, and should be rated well above the peak volts they are required to stand. This gives a measure of protection to the rest of the circuit in event of a partial breakdown. It is just as well to fit a fuse in the main supply lead from the AC source.

This type of rectifier is valuable in that it reduces the cost of the transformer. It is possible, in fact, to feed the rectifier system from the main HT transformer when either the positive or negative EHT rail is earthed, thus saving the necessity for any extra transformer at all.

Another type of EHT supply which is of interest is the high frequency type. The general circuit is shown in Fig. 6. The oscillator generates a strong signal at a suitable frequency to avoid interference with other parts of the apparatus (Generally of the order of 50/100 kc/s) and this signal is applied to the grid of a pentode or tetrode output valve. The negative cycles cut

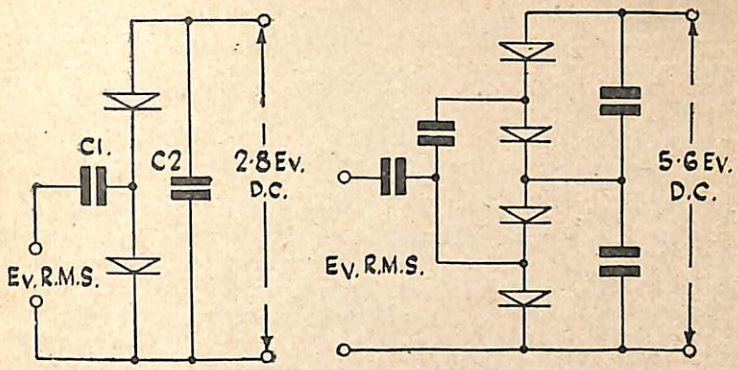

(a) Fig. 5 *Cascade rectifiers* (b)

off the anode current in this valve very sharply once in each cycle. The sudden drop in current through the coil forming the anode load results in a very high potential being generated across the coil, and this may be passed to a suitable rectifier to derive the EHT.

This system has several advantages, not the least of which is the low smoothing capacity required, because of the high operating frequency. It removes the need for a high voltage transformer entirely, and is especially applicable to the EHT supply for television sets. The Wireless World design used the principle, and it is also used by several well known manufacturers.

There are certain difficulties to overcome, however. The coil in the anode circuit of the valve must be capable of standing up to the high voltage developed across it. It should be wavewound or pilewound, and split into several sections. It may be wound on a bakelite or paxolin former, the sections being spaced about $\frac{3}{8}$ inch apart. Suitable coils are to be found in many radar sets, in the pulse generator sections. If a complete coil is not available the former may be obtained in this way, and the wire taken from some other component.

The oscillator valve may be of any available type, but the " switching " valve must be able to stand up to the heavy duty. It has to pass a large anode current, and stand up to several kilovolts on the anode. Suitable types are the American 807, the CV73 (KT66), or the 61 BT. These all have top cap anode connections, and are able to stand up to 6 or 7 kV in short pulses. The rectifier may be of the half wave type, suitable insulation being required for its heater winding.

These different types of power unit all have their special uses. The reader must decide for himself which is the most useful to his purpose.

The caution to the impatient regarding the difficulties of winding transformers without proper equipment may be repeated, and a further caution added regarding the dangers of high voltages. No-one likes to get a shock, though some of the more stupid of us pretend otherwise to show they can "take it." Nevertheless, if no especial precautions are taken, someone is bound to come into unwelcome contact with a "hot" rail sooner or later. The only way to avoid it is to use the proper safety devices. Put a cover over the power unit which must be in place before the current can be switched on, and which shorts the output terminals to discharge the condensers as soon as it is removed. Shocks from 350 volt HT rail are bad enough, and this procedure is advisable even at low levels. With several kilovolts floating about, its omission is sheer suicide. You don't generally do it more than once.

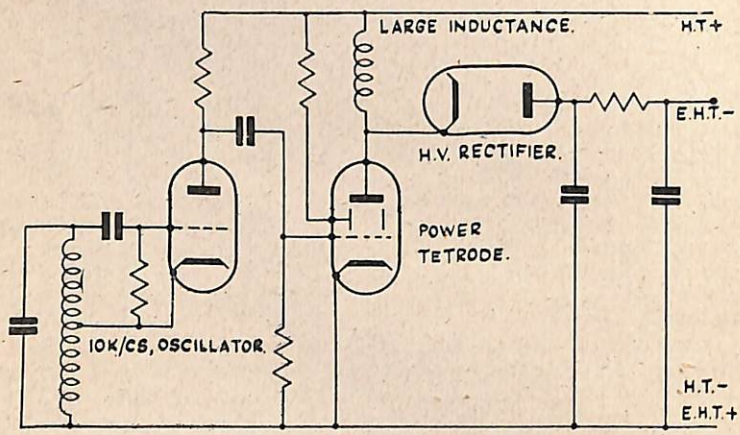

Fig. 6. *RF EHT Supply*

Chapter Four

TESTGEAR

No experimental work proceeds far without testgear, and this chapter will be devoted to the description of some of the more essential items of test equipment which can be made from ex-service gear. It has been assumed that the work starts from scratch, with no ready-made instruments available, with the exception of a voltmeter. It is possible to start without this, even, but some meter must then be obtained and calibrated to act as a standard. If a current meter is also available, the measurements can be made with much greater accuracy.

No detailed layout data will be given. That depends on the chassis available. More than one piece of gear may be put on one chassis ; this is particularly convenient in some cases.

There are several ways of establishing a standard of current with the help of a voltmeter, but the best is probably that using valve heaters. By this means current meters may be checked for accuracy or provided with calibrations. This should be the first stage. It is probable that a number of calibrated and uncalibrated meter movements are available, and the first step should be to check these against each other for agreement. Small errors in calibration do not matter so much if all meters used together are in agreement.

The valve heater provides quite a reasonable standard of resistance with which to establish the relation between current and voltage. The correct operating voltage is applied, and the current measured. Several valves can be used in turn as a check, and the results averaged after rejection of any which are particularly far from the mean.

The process gives what may be termed 'local standards' of current, voltage, and resistance. The calibration of all meters should be corrected to this, and a number of resistances set aside which have been accurately measured to this standard. These form the basis of the measuring apparatus to be described.

The first item to be made is a comparison bridge. It might be thought that a general purpose testmeter comes first, but if this is required, its construction presents no great difficulty and therefore no data will be given. The bridge circuit in Fig. 7 is that used in most commercial comparison

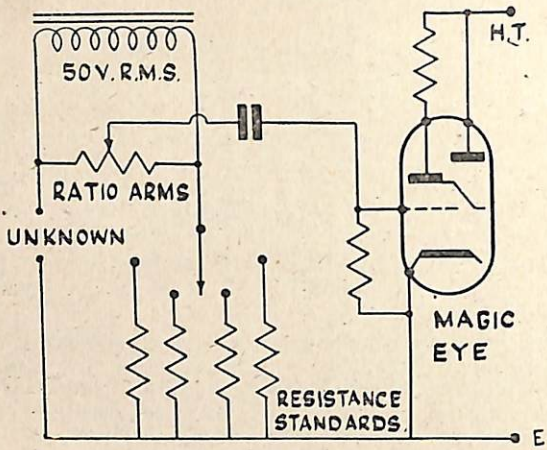

Fig. 7. *General purpose bridge circuit*

bridges. The variable resistance forms the ratio arms. It should be between 1,000 and 10,000 ohms, and rated at not less than three watts. This is the rating of the standard type of potentiometer, such as that used for volume control purposes in domestic receivers. The resistance standards are made up from odd values by parallel and series connection to give the required total value.

The bridge is fed with 50 volts 50 c/s from the supply transformer, and the null indicator requires 250 volts HT at 5 mA, and LT suitable to the heater of the particular valve used. If a magic eye is not available, it is possible to replace it with a twin triode valve and meter. In this case, the meter is connected between the two anodes, and one grid earthed, the other grid being connected to the input circuit.

The variable resistance is calibrated in terms of the ratio given at each setting, and may be fitted with a slow motion drive, in order to give increased accuracy. The form of the scale is shown in Fig. 8. The actual calibration may be made by marking known points found by use of the measured resistances, or by using the relation

$$N = \frac{Rt}{Ra} - 1$$

Where N is the ratio of a given point, Ra is the resistance between the tapping point and the end, and Rt is the total resistance of the potentiometer. A third method is to use a " metre bridge " consisting of a wire one metre long clamped against a metre rule. This is connected as the " standard " and " unknown " arms.

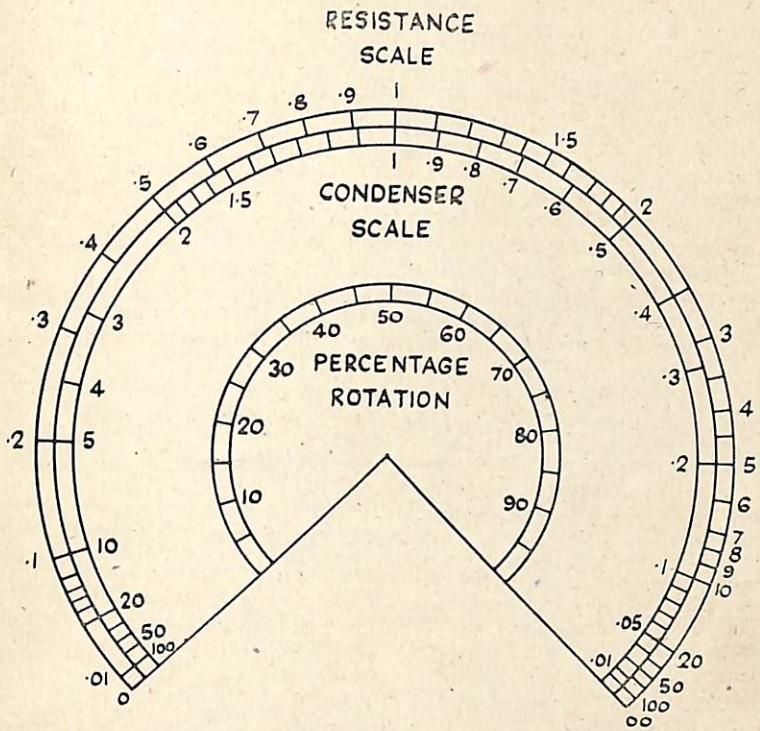

Fig. 8. *Ratio scale for comparison bridge*

As shown, the bridge has only resistance standards, and can only measure resistance. When capacitative standards have been established, capacity standards can be added, and condensers can then be measured, the ratio scale being reversed in this case.

The second item of equipment is a signal generator. This is an essential part of the experimental test equipment, and may often be obtained in complete form in the surplus market. In this case, it will only be necessary to adapt the power input to suit the power pack available.

If a complete signal generator cannot be obtained, a simple form may be made up from surplus parts which will be quite useful. The main difficulty is the tuning condenser and coils. These items are rare in service equipment, since the tuning is generally of the remote controlled variety, using small

pre-set condensers, and the coils are only suitable for the service wavebands. These parts may have to be found elsewhere, but there are many suitable oscillator valves, such as the CV6 or VR135, which has top cap anode and grid, and makes an efficient and powerful oscillator ; the VR137 or EC52, a ' single ended ' triode, and the many orthodox triodes like the 6J5, 6C5, etc. The two first mentioned will work at frequencies up to 300 mc/s, while the others are suitable for lower frequency operation, say to 30 mc/s. The amplitude of oscillation may be adjusted by altering the grid resistor. If a pure output is required, a stabilising circuit should be used.

A useful scheme is to add a fixed frequency oscillator and mixer, so that an audio frequency output can be obtained by the beat frequency method. If the fixed oscillator is crystal controlled this circuit can also be used to check the calibration of the main oscillator. Sad experience has shown that the construction of an RF oscillator is easy compared with the calibration.

The best procedure for calibration is to start by finding as many rough frequency points as possible. The broadcasting stations whose frequencies are known will help here. If no crystal oscillator is available for check purposes, these points may be used to draw a calibration curve. It is better, however, to use a 100 kc/s crystal oscillator to obtain the final points. This can be checked for accuracy against the 200 kc/s carrier of the Light Programme transmitter. Using a beat frequency circuit, check points can then be found at 100 kc/s intervals throughout the oscillator range. The complete circuit is given in Fig. 9.

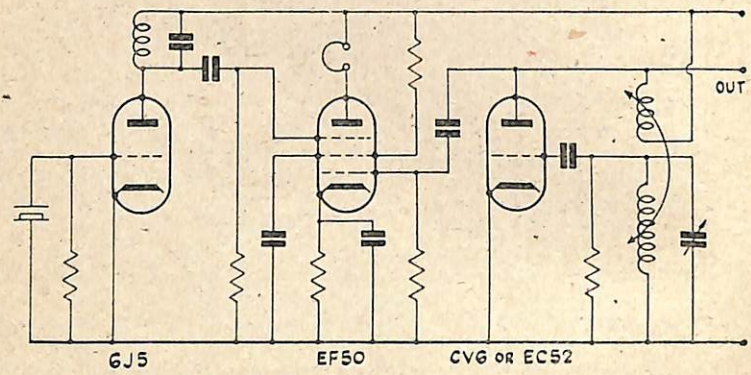

Fig. 9. *Signal generator with crystal check*

A point in passing regarding frequency standards may be noted. If there is a piano available which is properly tuned to the standard pitch (this can be checked against 'live' music broadcasts, but not against recordings) it forms a ready-made frequency standard. The frequency of the A above middle C is 440 c/s, and other notes are in constant relation to this. The complete list of notes and frequencies in the octave from middle C up are :

Middle	C	—	D	—	E	F	—	G	—	A	—	B	C
	262	277	294	311	330	349	370	392	415	440	466	494	523

For those to whom a piano is only an ornament, it may be said that middle C is near the lock of the keyboard cover, the letter symbols indicate 'white' notes, and the lines the 'black' notes between them. With each octave upwards, the frequency of each note in the scale is doubled, and with each octave downwards it is halved. The G in the third octave below middle C is therefore 49 c/s, and the top C of the next octave above the one shown is 1,046 c/s. This can be used for identifying audio frequencies in amplifier response measurements or for measuring beat frequencies in RF measurements. The full range of the piano is from 27.5 c/s to 4176 c/s., but this varies with different types.

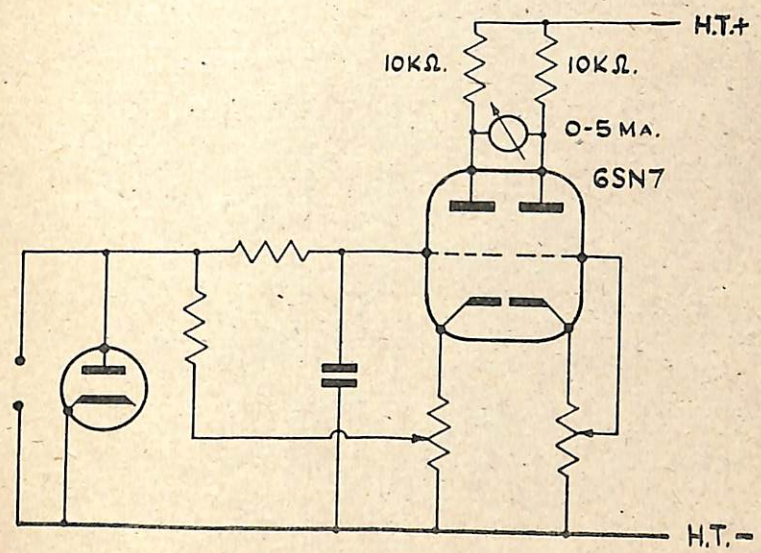

Fig. 10. *Valve voltmeter*

After this digression, more possible adaptations must be considered. A standard of frequency being available, a valve voltmeter will be required to make the fullest use of it. This may be of the diode type, with an amplifying stage after the diode to increase the sensitivity. The VR92 miniature diode is useful here, and may be mounted in a ' probe ' unit on the end of a lead carrying the LT supply and the lead to the amplifier input. The amplifier may be any suitable type, a high slope pentode like the EF50 giving a good sensitivity. In the circuit shown in Fig. 10, a twin triode is used in a balanced circuit for stable zero-set. Triodes are shown for the sake of simplicity, but two pentodes could be used where greater sensitivity is required.

Armed with valve voltmeter and signal generator, a standard of capacity may now be established, by comparing the current through the condenser with the voltage across it. Alternatively, a Wien Bridge may be set up, as in Fig. 11. In this bridge, one condition of balance is $(2\pi F)^2 = R_1 R_2 C_1 C_2$. The product of the two capacities may be found from this in terms of frequency and the two resistances, and the ratio of the capacities can be found with the general purpose bridge. The actual values are found from the ratio and the product.

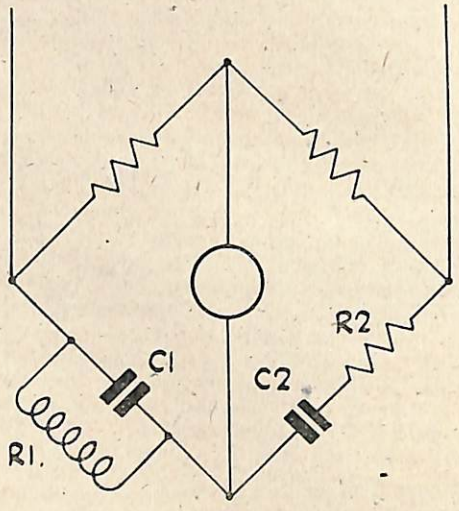

Fig. 11. *Wien bridge*

The capacity standard so established may be used to set up standards for the measurement of capacity on the general purpose bridge. This will permit the general measurement of capacity, and from this the measurement of inductance becomes possible. At this stage the field opens out, and practically any sort of measurement can be based on the foregoing instruments

It may be thought that the construction of such an imposing array of apparatus will require the expenditure of a considerable amount of time and money It will. It is, on the other hand, quite impossible to carry out any real experimental work without some measuring apparatus, and the apparatus which has been described represents the absolute minimum. It is far more profitable to spend some considerable time on such apparatus as this than to start right away on a cathode ray oscilloscope or television set, however attractive these projects may seem. Work on them will probably be held up sooner or later for want of one of the instruments described above. A useful idea is to form a group of several experimenters. Each of them tackles one item of testgear, pooling resources and sharing the results.

Before leaving the subject, a short description of a combined test instrument which has been found of great value in experimental work may be of interest. Originally intended for measuring the performance characteristics of receiver coils, it has proved to be of considerable value to any other applications (See Fig. 12).

It is contained in a large steel case, and is built on a steel chassis and panel. These are probably the most expensive items apart from the mains transformer. The power pack is fitted as a part of the equipment for convenience, and has a stabilising circuit in the HT feed, so that the HT remains constant whatever the number of units in use.

The units are : a signal generator ; a crystal check oscillator ; a valve voltmeter ; and a calibrated variable condenser, which may be switched in as the tuning capacity of a beat-frequency oscillator, the crystal calibrator providing the fixed frequency. All these units may be used independently, HT switches being provided so that the units not in use can be switched off.

Apart from a complete analysis of coil characteristics, and the normal uses of each unit, this instrument can be used to check the performance of receivers, transmitters, and amplifiers. The valve voltmeter ranges extend up to 6,000 volts with external multipliers, and all measurements required in a television set may be carried out. The only additional instrument required in the normal way is a cathode ray oscilloscope.

In spite of this, the instrument is built almost entirely from ex-service components. The main exceptions are the case, the mains transformer, and the smoothing condensers. Even the crystal was a surplus item, which checked against the BBC 200 kc/s signal to within 0.01%. With the exception of the case, the total cost was about £7.

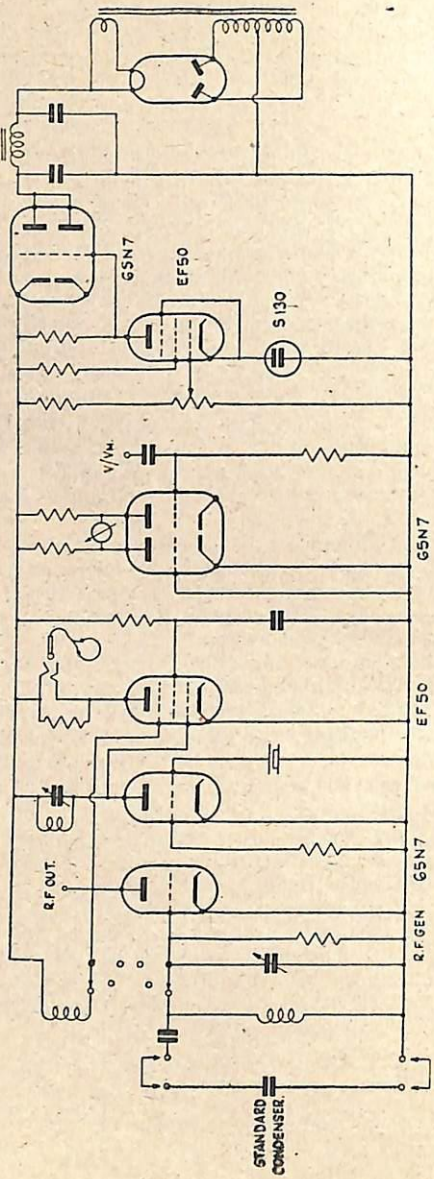

Fig. 12. *Coil test circuit*

Chapter Five

CATHODE RAY TUBES

Cathode Ray Tubes have a particular fascination for the experimenter, and the availability of tubes in the surplus market has made work in this field accessible to all. The information on the apparatus available is scanty, however, and a complete chapter has therefore been given to the subject. It will be based on general detailed descriptions of particular tubes as this is likely to be of more general value.

Cathode Ray Tubes may be divided into two main types, the tubes using electrostatic deflection and those using electromagnetic deflection. The electrostatic tubes generally use electrostatic focus systems, but the electromagnetic tubes may use either type of focus arrangement. Oscilloscopes are generally based on electrostatic tubes, while the television sets mostly employ the magnetic type. The reason for this is that the former system is more convenient for small screen work, especially where the trace has to be moved by use of shift controls, but the magnetic type is better for large deflections where no shift is needed.

A further classification may be made on the basis of screen persistence, which is the length of time during which the trace remains after the spot has moved away. Television and high-speed oscilloscopes require short persistence screens, while certain specialised types of oscilloscope use tubes with screen persistence up to 5 seconds. It is unfortunate that a large number of the tubes available are of the long persistence type, and that it is not always easy to recognise them by any means other than knowledge of the reference numbers and actual testing.

The final difference between tubes is in respect of their screen sizes. The screens diameters vary from 1 inch to 12 inches, the smaller sizes being suitable only for oscilloscope work, and the larger sizes being mainly applicable to demonstration oscilloscopes and television. The intermediate sizes will serve for either purpose.

Television work requires, ideally, a short persistence tube with white fluorescence, the deflection being magnetic, and the screen diameter large. There seems to be only one tube of this description available in the surplus market, the CV274, which has a 12 inch screen. Having dealt with this sad point, the general characteristics of some known tubes may be reviewed.

ELECTROSTATIC TUBES

NC1, NC19, VCR522. These are small tubes with a nominal screen diameter of 1 inch, and are generally similar to the G.E.C. type E4103-B-4, which is used in the G.E.C. 'Miniscope'. They all have screens giving a green fluorescence of medium persistence, and are fitted with British 9 pin bases. They require 800 volts on the final anode, and about 135 volts on the focus anode. They can be used in miniature oscilloscopes, requiring about 200 volts on the deflection plates to move the spot across the screen.

NC6. This is a 3 inch tube, the screen having a green fluorescence of medium persistence. It is fitted with a 12-way side-contact base, the connections to the Y deflection plates being brought out to side caps. It requires about 3,000 volts on the final anode, 1,450 volts on the first anode, and 600 volts on the focussing anode, and requires about 500 volts to move the spot across the screen. It has especially good focus.

NC7. This is an extremely useful tube for television test work. It has a 9 inch diameter screen giving a green fluorescence of short persistence, and is fitted with a 12-way side contact base. The maximum final anode voltage is 6 kV, but it may be operated with 5,000 volts. At the maximum voltage, the first anode should be at 1,700 volts, and the focussing anode at about 1,000 volts. It requires about 800 volts for full screen deflection.

NC12. This is a 6 inch tube with green trace of short persistence. It has a 12-way side contact base, and for ideal operation requires 5 kV on the final anode, 1,800 volts on the first, and 800 volts on the focus anode. It requires 800 volts for full screen deflection in one axis, and 1,500 in the other. It is similar to the G.E.C. E-4504-B-16.

NC14. This is an NC12 with blue screen of unknown persistence. The operating voltages are also considerable lower, the maximum final anode voltage being 2.5 kV. With 2 kV on first and final anode, the focussing anode should be at 350v. The deflection sensitivity is higher, the full screen voltages being 550 and 300 volts.

VCR97. This is similar to the NC14, but with green fluorescence of medium persistence

VCR517A. This is NC14 with long persistence afterglow type of screen.

NC15. A 4 inch tube with a 12-pin base. This is believed to be based on a Mullard tube (A41-G-4A) but no definite information can be found. The A41-G-4A has a long persistence screen of the afterglow type, and a non-standard base.

NC16. VCR139A. These are 2¾ inch tubes with green trace of medium persistence. They have 12-pin bases (sometimes called 10-pin bases, as two pins are generally omitted) of the spigot type, and require between 800 and 1,500 volts on the final anode, the same being applied to the first anode. The corresponding focus voltages are 120 and 250. Full screen deflection requires about 500 volts at a final anode voltage of 1,500. (Similar to G.E.C. E-4205-B-7).

ACR10, VCR139. These are similar to the NC16, but have short persistence screens.

VCR138. This is a 3½ inch tube with a short persistence green trace. It requires the same voltages as the NC14, and has a 12-way side-contact base. The deflection sensitivity is similar to that of the NC14.

VCR138A. This is a VCR138 with medium persistence screen.

ELECTROMAGNETIC TUBES

Relatively few details are available regarding the electromagnetic tubes, but the following notes may help.

VCR84, VCR85. These are 12 inch long persistence tubes of the afterglow type. Electrostatic focus is employed.

VCR87. A 6 inch tube of the same type.

VCR140. A 12 inch tube with long afterglow and magnetic focus.

VCR516. A 9 inch tube with long afterglow and magnetic focus. It has an international octal base with heaters on pins 2 and 7, and cathode on 8. The grid is generally on pin 5. The anode connection is a side cap.

VCR528. A 12 inch long persistence tube with electrostatic focus. This tube has a shorter persistence than the others, but is of the afterglow type, the trace persisting for about 1-2 seconds.

VCR530. A 6 inch tube for magnetic deflection. Screen unknown.

CV274. The only white trace tube, with 12 inch screen, electrostatic focus, and an American 11-pin base, the connections being : H.C. Grid-A1.-.-.A2.-.-.H.

Considerable confusion can arise from the fact that many of the above tubes have alternative identification numbers, and to cover these, and other tubes which have not been mentioned, some visual identification points must be given. The profiles of many types are distinctive, and some are given in Fig. 13. The magnetic types are characterised by their long thin necks, and these tubes are often fitted with octal bases.

The most important point is often the nature of the screen. Full information on this can only be obtained by testing, but long persistence screens of the afterglow type can generally be spotted by the following method. Hold the screen in strong light for a few seconds, and then shade it. If it is a cascade action type of screen it will glow with a greenish fluorescence. Short persistence screens do not glow in this manner, but remain a cold white. Some idea of the degree of persistence can be obtained by the time the glow lasts, but this will depend on the amount of light falling on the screen in the first place, so allowance should be made accordingly.

So far, nothing has been said about base connections. That can be attributed to a natural desire to d fer an unpleasant task. There is no possibility whatsoever of predicting the exact base connections of service tubes. Each type has a 'preferred' connection system, but this may be varied to some extent at the discretion of the manufacturer. All that can be done is to indicate the general rules, and some of the variations, and then give details of some tests which can be used to check each tube. In general,

1" TUBES
BRITISH 9 PIN BASE

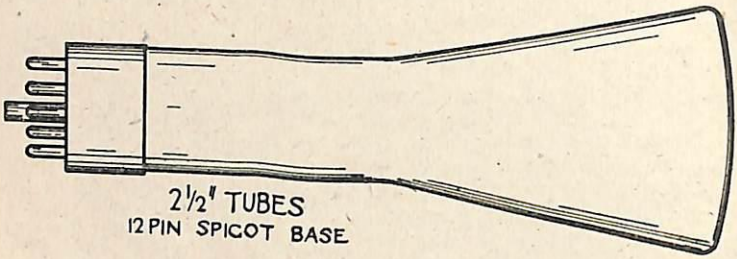

2½" TUBES
12 PIN SPIGOT BASE

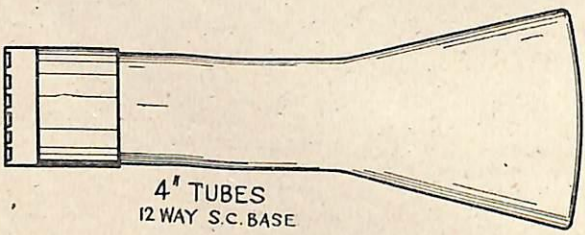

4" TUBES
12 WAY S.C. BASE

the variations are such that the tubes are effectively interchangeable, since they are mostly in the form of the inclusion or omission of internal links between electrodes.

The British 9-pin base is mainly used for the 1 inch tubes. The pins are arranged in a circle, and there is no keyway. Four of the pins are closely spaced, and these are numbered, in a clockwise direction looking at the tube base, 3, 4, 5 and 6. The usual connection system puts the heater on 4 and 5, with the cathode on 4, the grid on 6, and the focus anode on 3. These connections are fairly reliable. The most frequent connections for the rest are : Anodes 1 and 3 on pin 7, the X plates on 1 and 8, and the Y plates on 2 and 9. The variations include strapping one plate of each pair to the final anode, and altering the plate connections.

The next base, in ascending size, is the 12-pin spigot type, which looks like an overgrown octal. Pins 6 and 12 are often omitted, and the base is sometimes referred to as the 10-pin spigot type, but that is misleading. Numbering from the spigot, as for an octal, pin one is almost invariably the cathode. The heaters are on pins 3 and 4, and the grid on pin 2. The focus anode is on pin 5. The other side of the base carries the final anode and plate connections, the anode being central, on pin 9, the X plates on 8 and 10, and the Y plates on 7 and 11. This connection system applies for the NC16 and the VCR139A, but there are some tubes with a completely different arrangement, which can only be found by checking.

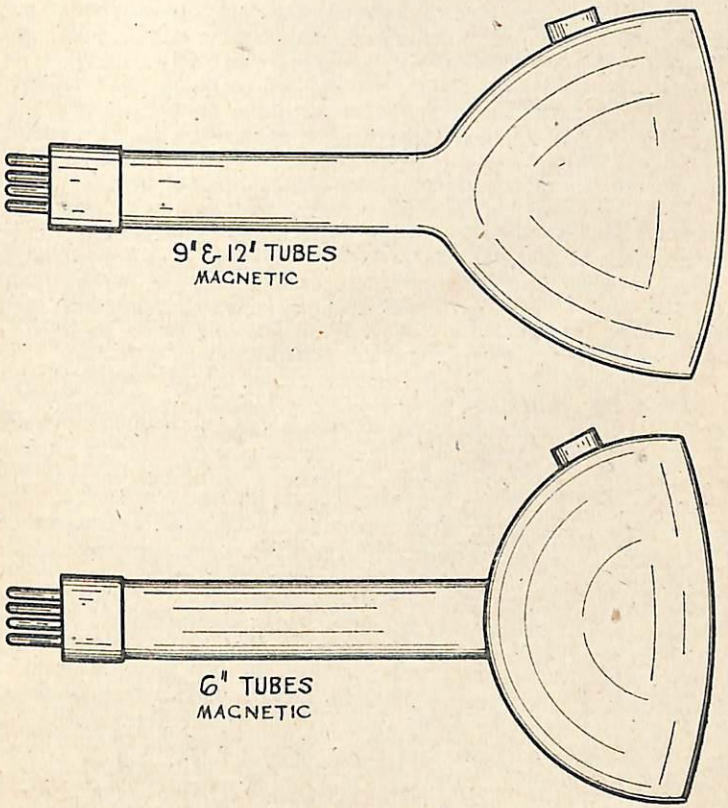

Fig. 13. *C.R.T. profiles*

The 12-pin side contact base is used for tubes with screen sizes between 3 inch and 9 inch. The numbering runs clockwise from the keyway. The grid is usually on pin 1, the heaters on pins 3 and 4, the first anode on 5, and the focus anode on 6. The graphite coating goes to 7, and the final anode to 10. These are fairly reliable, but the other connections vary. In the case of the NC6, the Y plates are on side caps half-way down the tube, the X plates are on 8 and 12, and the cathode goes to pin 3 with the heater. With the NC7, the Y plates come on to 8 and 12, and the X plates go to 9 and 11, the cathode being again on 3. In other types, the cathode is on pin 2. The safest procedure is to strap 2 and 3 on the base, which will deal with cathode variations, and assume that the plates are connected in the manner given above.

The last standard base is the octal, used with magnetic tubes only. The heaters go to 2 and 7, the cathode to 8, and the grid is usually on 5. The only other connection is the final anode, in most cases, and this goes to a side cap near the screen. If the focussing is electrostatic, the focus anode may go to pin 3, but it is safer to say that anything may happen.

Apart from these relatively standard bases, there are many other types, some of which are only used for one tube. It would be unprofitable to describe them in detail, but some general features may be noted. Whatever the type of the tube, the 'gun' connections (*i.e.*, the heaters, cathode and grid) are generally grouped together. A second group is formed by the final anode and the deflection plates, if any. The focus anode may be included in either group, but is generally regarded as part of the gun.

The 'gun' group can be located with ease by finding the heater connections. The rest of the connections can then be located by the following test procedure. Electrostatic tubes are dealt with first.

Having identified the heater, the 'final anode group' may be strapped together. If a capacity bridge is available, it may be used to check for a separate cathode connection, which will show a capacity of some 10-15 $\mu\mu$fd. to the heater. Internal strapping of loose pins can be found by further testing and a low-reading ohmmeter is useful here. A suitable circuit is given in Fig. 14.

If there is any doubt about the 'gun' connections, these may all be strapped to one side of the heater. If a moderate anode potential is applied between the two groups, a patch of fluorescence should appear on the screen. The grid may now be located by disconnecting the 'gun' connections one by one, and substituting a wire taken to the negative side of the supply, the rest of the gun connections being fed through a resistance of about 10,000 ohms. The check wire will than be negative with respect to the other connections. If it is connected to the grid, the spot should become dimmer, while connecting it to the cathode would cause an increase in the fluorescence.

This test should be carried out as rapidly as possible, and the anode voltage put on momentarily for each check, and then switched off again, the heater being left on. Suitable supplies are : Heater : 4v. (almost all service tubes use 4v 1a heaters, and the exceptions are usually marked).

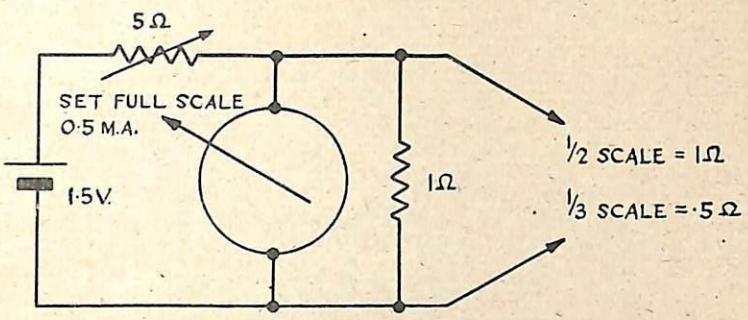

14. *Low reading ohmmeter*

Anode : about a quarter of the maximum final anode volts. If this is unknown, a useful rule of thumb is to start with the voltage equal to 500 times the square root of the screen diameter in inches. This should be adjusted until the fluorescence is visible, but not bright. The alteration may be made by changing connections in the case of a cascade doubler supply, or by varying the value of a parallel ' bleed ' resister in the case of other power units.

This test will locate the grid and cathode, and the focus anode may now be found. The supply for this should be about one fifth of the voltage on the final anode, and may be taken from the bleed resistor. The effect of varying this voltage should be to alter the size of the fluorescent patch on the screen. If the patch is not affected, try another unknown pin.

The last connection, apart from the plates, which should be left strapped, is the first anode. This may be in the final anode group, but in some cases, notably with the larger tubes using the side-contact base, it goes to a pin on the gun side. If the tube focusses up well, it is probably strapped internally to the anode. If no trace can be obtained at all, it generally means that the first anode is among those strapped to the gun assembly. The location of this connection is very difficult to accomplish without damaging the tube, but the application of about 350-400 volts on the first anode should show up the trace, and yet not be liable to cause damage to the grid. The test should, however, be no more than a very rapid " on and off again," so that if the positive potential is put on the grid, there is insufficient current flow to cause damage.

When all the gun connections and the first and focus anode pins have been located, it should be possible to obtain a sharply focussed spot by adjusting the first anode and focus anode voltages, the first anode being kept at a higher potential than the focus anode to form the focussing field. The spot should be nearly in the centre of the screen. The deflection plates

may now be identified by disconnecting them from the final anode group one at a time, and applying a voltage to the vacant pin. This voltage may be obtained by tapping down on the bleed resistance.

The direction of the deflection should be noted, and the two pairs of plates thus identified. This completes the process, and all pins should now be known. A suitable circuit for the test is shown in Fig. 15. This provides all the fixed and variable voltages required, and also provides convenient switching. The test switches can be made from strips of brass fitted with insulated push buttons.

The special precautions to observe are : keep the spot brilliance low, and make the tests as short as possible until the grid and cathode have been fixed with certainty.

With magnetic tubes having electrostatic focussing, the same procedure may be followed. When the focussing is magnetic there is little doubt regarding the connections, and the main problem is to find the correct magnetic field for the focus. There will be a suitable coil fitted in the equipment, and it will be necessary to provide an adjustable current supply through this.

Having obtained a suitable tube, identified the connections in the manner suggested, or by reference to the standard lists, the reader will want to build it into an oscilloscope or television set. If he has bought the tube as part of a chassis unit, most of the necessary circuit will be ready made, and that is required to trace out the circuit and remove all redundant parts. If there is an amplifier feeding the deflection plates, this should be retained, as it will probably be of use.

The greatest trouble is likely to arise over the time base design. The type chosen will depend on the valves available, and the deflection voltages required by the tube. It will generally be necessary to use amplifiers for all tubes of the larger sizes, and all this is really a matter for personal ingenuity.

Many useful hints can, however, be obtained from the circuits related to the tube in the original apparatus, and for this reason it is better to buy the tube as part of a unit, rather than separately. Apart from this the auxiliary apparatus used in the display unit is likely to be of considerable value in building up the new apparatus.

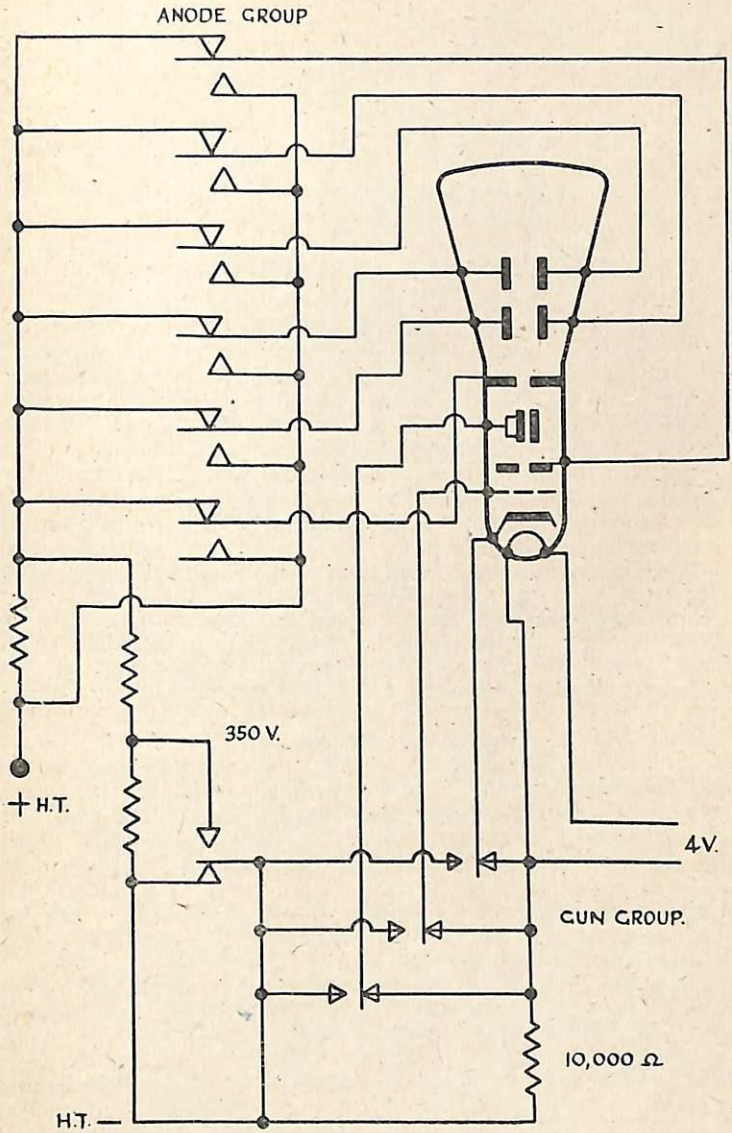

Fig. 15. *C.R.T. Test*

Chapter Six

OSCILLOSCOPES AND TELEVISION APPARATUS

Having dealt with the selection and testing of Cathode Ray Tubes, the next stage is the use of them in oscilloscopes and television apparatus. Now, these are specialised subjects, and it would be impossible to give a full description of them here. This chapter will therefore consist of a series of notes on circuits peculiar to this class of apparatus, from which a large variety of complete equipments can be built.

The first and most important type of circuit is the C.R.T. feed. The question of suitable power supplies has been dealt with in an earlier chapter, and it only remains to describe the general lines to follow in the design of the electrode feed potentiometer system.

In the case of the electrostatic tubes, and the magnetic tubes using electrostatic focus, at least four different voltage levels are required. These go to the final anode, the focussing anode, the cathode and the grid. If the first anode is not connected to the final anode, a further voltage level will be required. The current drawn by the tube is relatively small, and this suggests the use of a potentiometer feed system to provide the required voltages.

The potentiometer consists of a resistance chain across the EHT supply, and the total resistance should be such that the drain through the potentiometer itself is about 0.5 mA. The wattage of the resistances used should be checked to ensure that they are adequate, though trouble is unlikely at the lower values of EHT, since at 1,000 volts the power dissipated in the whole chain would be only half a watt. The total resistance in this case would be 2 meg ohms.

The potentiometer is shown diagrammatically in Fig. 16. The final anode goes to the shift control network at the positive end, and is usually earthed, so that the deflector plates can be at earth potential. The grid goes to the negative end. The cathode is tapped to the slider of the variable resistance forming the most negative section of the chain, and the focus anode is tapped to another variable resistor further up. In the lower voltage tubes, the first anode goes to the positive end of the chain, while for higher voltages, it may have to be tapped down to a point between the final anode and the focus control.

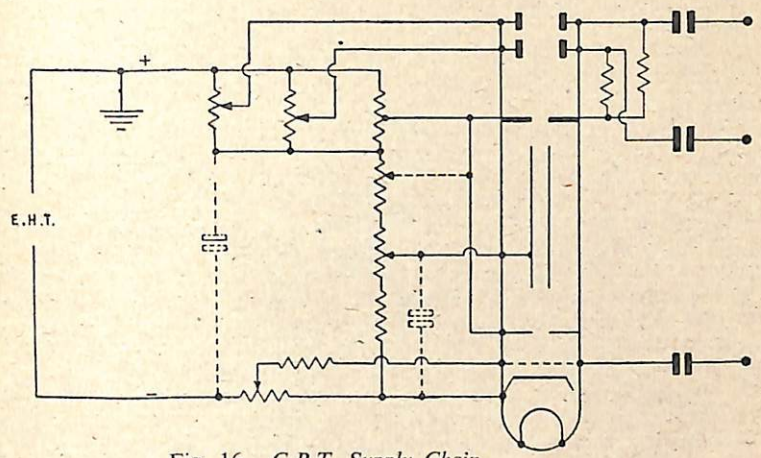

Fig. 16. *C.R.T. Supply Chain*

One of each pair of deflection plates is returned to the final anode through a high resistance, and the other is similarly returned to the appropriate shift control. The shift controls are potentiometers arranged so that they apply an adjustable steady bias to the deflection plates. The final anode is held at the potential of their centre points by a fixed potentiometer. The feed to the deflector plates is brought in through condensers, to avoid interference with the shift bias. In some cases, where the frequency of the observed signal is very low, the condensers may be shorted, and unbalanced feed used. In the normal way, however, it is better to use balanced feed, as this helps to avoid distortion in the trace.

This basic design may be used for any type of electrostatic tube, the resistance values being calculated from the potentiometer flow and the voltages required. The condensers shown in dotted lines are sometimes needed to avoid hum modulation of the beam, but their necessity can only be determined by testing.

The supply for a magnetic tube is relatively simple. There is only one EHT lead, going to the final anode, which is usually a side-cap connection. The voltage applied should be controllable to some extent, as this permits fine focus adjustments to be made. The simplest form of control is a high value variable resistance in series with the EHT winding of the feed transformer. It should be placed in the circuit in a position where one side on the resistance can be earthed. With this type of tube, the negative side of the supply is usually earthed, as there are no deflection plates, and the controls are on the cathode side.

The brilliance control is in the form of a variable resistance between the cathode and the negative side of the EHT supply, the grid being taken to the negative side.

The focussing and deflection coils for fully magnetic tubes are best purchased. If there are none with the tube, it is possible to make up suitable coils, but the data varies from tube to tube, and the number of turns, etc., can only be found by trial and error methods. It should be remembered that the important factor is the number of ampère-turns. The number of turns in the deflection coils should be as low as possible.

A useful method of making up deflection coils may be given, however. The coils are based on a skeleton iron core made up from a few stampings taken from a small electric motor. These stampings should be multipole stator types, preferably with an even number of slots, or with slots so disposed that symmetrical windings are possible. The stampings should be spaced about ¼ inch apart, bolts being passed through the assembly to clamp the whole. The windings are made up in the form of thin coils on a suitable jig, wrapped with thin tape, and inserted in the slots.

A general view of a partly completed assembly is shown in Fig. 17. The inside diameter of the stampings should be a little more than that of the tube neck, and the length of the assembly should be about 2½ inches. The method of inserting the windings can be seen, while a suitable form of connection strip, in circular form, is shown at the lower end of the assembly. The paper inserts shown in vacant slots are useful in providing adequate insulation. The slots may be sealed by strips of thin card slipped in on top of the winding.

A great advantage of this type of coil is that the winding elements may be removed with ease when alterations are required. If the coils are carefully proportioned, it is possible to obtain a far more linear deflection than with the more usual type of former, and the efficiency is higher. For oscilloscope work, the shift required may be obtained by using auxiliary coils through which DC is passed. The polarity will control the shift direction, and the current flow its magnitude.

The deflection amplifiers required for electrostatic systems are straightforward voltage amplifiers, and little comment is necessary. It should, perhaps, be noted that for the larger types of tube special types of amplifier valve must be used to obtain sufficient voltage for full screen deflection.

In the case of magnetic deflection, on the other hand, the feed amplifiers are by no means straightforward. The trouble arises over the high reverse voltages developed across the output load during the flyback, or other sharp movements. In the line amplifier in a television receiver, for example, the flyback has to traverse the screen in less than 10 microseconds, and the reverse voltage may rise to 6,000 volts with a 9 inch tube in use.

With this sobering fact in mind, the effect on the circuit may be reviewed. The voltage is developed between the HT rail and the anode of the amplifying valve. The valve must therefore be able to stand a negative potential of 6,000 volts on its anode for 10 microseconds in every 100. The load, which is generally in the form of a matching transformer, must be able to stand

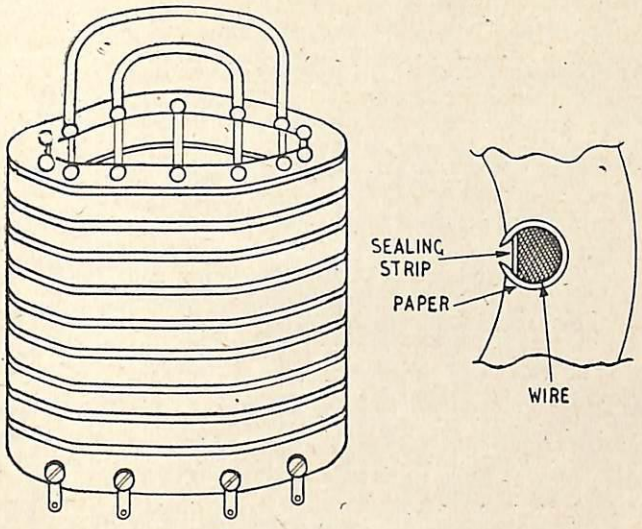

Fig. 17. *Deflection coils*

6,000 volts across its primary. 6,000 volts can jump quite a distance, and the wiring should therefore be arranged with care in this part of the circuit. Lastly, there is generally a feedback condenser connected to the anode, and this must be able to stand up to 6,000 volts.

In most cases, the reverse voltage is about the same as the EHT voltage with a sweep that crosses the screen in 10 microseconds. This rule of thumb should be treated with caution, but will generally serve for preliminary design work. If the spot takes 20 microseconds to traverse the screen, the voltage will be halved, and so on. At 25 c/s sweep, the flyback increases to 4,000 microseconds, and the voltage is one 400th of that appearing at 10 microseconds.

As indicated in the chapter on power supplies, suitable amplifier valves for this application are those with top-cap anode connectors. The 807 is a favourite, and there are several others. They need not be used for moderate reverse voltages, but it should be remembered that 1,000 volts is quite frequently generated in relatively small oscillograph equipment.

Another way of applying a signal to the C.R.T. is via the modulation grid. This is a standard feature of television sets, but can also be used in oscillographic work, when it can be made to provide a third 'dimension' to the pattern, sometimes called the 'Z' dimension. The principles are the same for all types of tube.

If grid modulation is to be used, the connection to the grid from the supply chain should be made through a resistance. The value of the resistance depends on the type of output circuit used to feed the grid, but should generally be high. The 'grid base' of most C.R. Tubes is about 30 volts for full modulation, and the output must be able to deliver this into a suitable resistance.

It should be noted that with electrostatic tubes, the cathode and grid are not usually earthed, and this raises the question of coupling. A high voltage condenser may be used, but in the case of television apparatus, a DC restorer will be necessary.

A final note on grid modulation : Either positive or negative signals may be applied to the grid, to produce increases and decreases in trace brightness respectively. If it is inconvenient for some reason to derive the output in the correct polarity, a permissible variation is to earth the grid and feed the signal to the cathode. This is not the best practice, but gets round an awkward corner now and then.

The last type of circuit to be covered is the time base.

There are literally hundreds of different types of time base, each having its particular advantages and snags. A few of the more generally used circuits will be described, the selection being based on the types for which suitable valves are most readily available.

The simplest time base is the neon lamp type. This simply uses a neon lamp and charging circuit. The voltage across the neon rises until the discharge begins, when the current through the lamp is greater than that applied by the charging feed. The condenser of the charging circuit, connected across the lamp, is therefore discharged, and the voltage across the lamp falls to the extinction point. Here the discharge ceases, and the voltage on the condenser rises again to the point where the lamp fires once more.

The charging time is proportional to the product of the charging resistance and the condenser capacity. The discharging time is proportional to the product of the capacity and the effective resistance of the lamp. The sweep and flyback times may therefore be adjusted together and independently, since the capacity affects both in the same proportion, while the charging resistance only affects the charging time. (Strictly, it also affects the discharge, since it is still charging the condenser during the flyback, but this may be ignored for conditions of short flyback time). The output voltage is constant, and equal to the difference between the ignition and extinction voltages of the lamp.

This time base is not very impressive in its performance. The output is only about 30 volts, or at most 40, and the sweep is by no means linear. The linearity may be improved by using a constant current charging device, such as a pentode valve, but the problem of frequency control then arises. It is possible to adjust the charging time by altering the grid voltage of the pentode, but this is not very satisfactory. In any case, the lamp will not operate at the higher frequencies, as it requires a certain time to de-ionise

before the discharge ceases. At the higher frequencies the output therefore drops rapidly, as the lamp fires at a potential well below its normal ignition voltage.

A modification of this uses the thyratron tube, which is similar to a neon lamp, but has a grid, which can be used for frequency control and synchronising purposes. The performance is otherwise about the same, though a slightly greater output can be obtained.

Turning to hard time-bases, the most useful for experimental work is probably the Transitron. There are many variations of this, but the general circuit of the time-base version is shown in Fig. 18a. The output is obtained from the anode, if a sawtooth waveform is required. A square wave can be obtained from the screen and suppressor. All the condensers and resistances affect the frequency and waveform of the output to some extent.

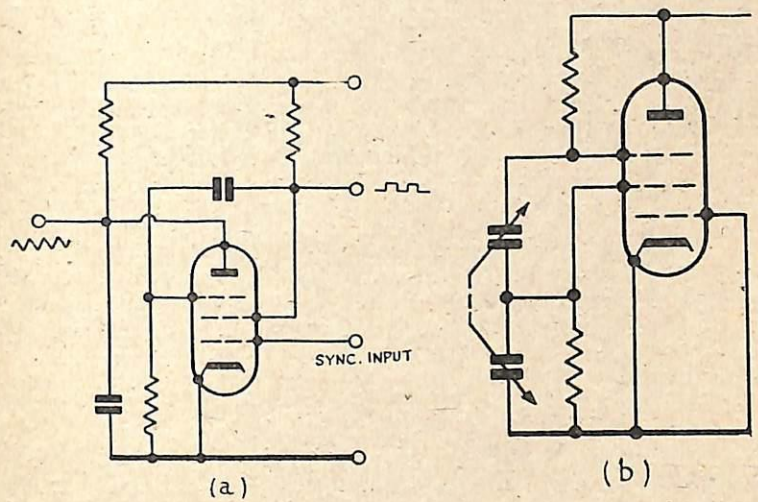

Fig. 18. *Transitron Circuit*

The Transitron is of especial value to the experimenter, because of its versatility. Using a single EF50 or other high-slope pentode, it is possible to make up a single valve resistance tuned oscillator, as indicated in Fig. 18b. The unusual feature about the Transitron is that the output obtained from the screen is in phase with the input applied to the suppressor, whereas all other valve amplifiers having a gain greater than unity give a phase reversal between input and output. An oscillator version is shown in Fig. 18c.

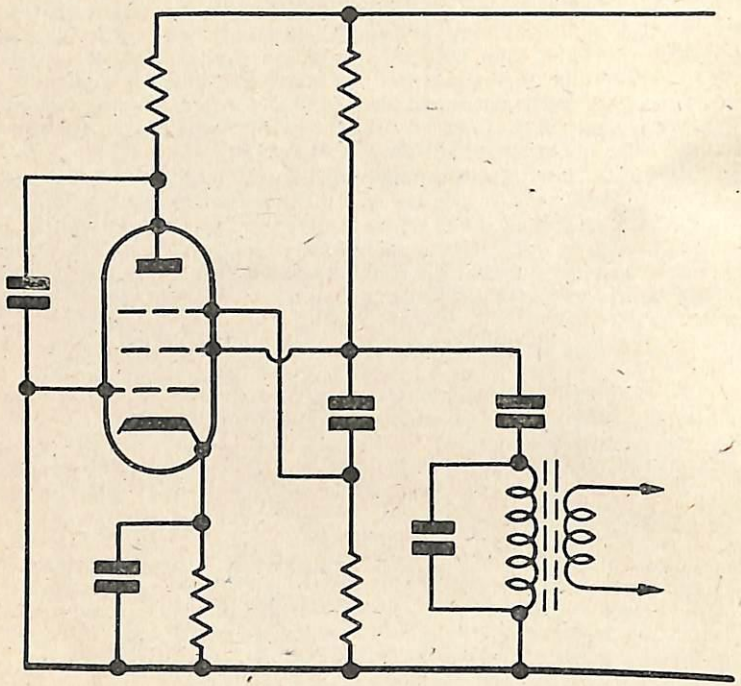

(C)

Part of Fig. 18.

The next type of time-base is the blocking oscillator. This is simply a normal oscillator with the circuit constants chosen so that the oscillator 'blocks' at a predetermined rate. The blocking phenomenon is well known to most of those who have built themselves oscillators, and is caused by the development of a large negative potential across the grid condenser. In practice, the oscillator never gets beyond the first three-quarters of a cycle of its normal oscillation, because before the peak voltage has been reached, the grid condenser has reached such a potential that the valve is cut-off. This is the fly-back time, during which the anode current drops to zero. The grid condenser then discharges through the grid leak, and the oscillation restarts. The flyback time depends on the natural oscillation frequency, and the sweep time on the product of the grid condenser capacity and the

grid leak resistance. The two parts of the sweep may therefore be controlled independently. It is common to use a second valve to produce the actual sweep signal. Fed from the oscillator, this discharges a condenser at each pulse, the condenser being charged between pulses through a resistance or a pentode charging valve.

A reasonably hefty triode should be used for the oscillator valve, and it is common practice to use half a double triode, such as the 6SN7, the other half being used for the discharge valve. It may be noted that if no especial precautions are taken, the oscillation may start in a positive or negative direction. If the grid begins to go positive, however, grid current flow will damp the input circuit, and the oscillation will swing the other way. It is sometimes necessary to put a diode across the grid-cathode circuit to take part of this current, and the cathode of the diode may be made negative to the cathode of the triode so that the diode starts to pass current first.

This section would not be complete without reference to the electronic switching circuit. This consists of a pentode valve, the input to the circuit being applied to the control grid in the normal way, and the output circuit being orthodox. The suppressor is fed with a control voltage, which may be in the form of a square wave signal. When the suppressor is positive, the valve operates in the normal manner. When the suppressor is negative, the valve is cut-off. By feeding two or more such stages from a common anode load, any desired number of inputs may be switched in and out by applying suitable waveforms. An example is the display of two or more different waveforms on the screen of a C.R.T. at the same time.

This circuit works best when the 'positive cycle' puts the suppressor at zero volts, and the 'negative cycle' is correspondingly *very* negative. This may be arranged by connecting a diode between the suppressor and cathode, so that the maximum positive excursion is limited. If considerable accuracy is required, and the amplification must be made stable, it is possible to use a cathode follower circuit. The amplification is then slightly less than unity, but is largely independent of the supply voltages and valve characteristics. In this form, the switching circuit permits the accurate comparison of two waveforms in respect of amplitude and shape.

All these (and practically any circuit imaginable, for that matter) can be used in oscilloscope work. No mention has been made of some of the specialised circuits, but these can be found in most text books on the subject, and require too detailed a treatment for inclusion here.

Chapter Seven

COMMUNICATIONS

Little can be said on the subject of communications equipment, since suitable gear is generally found in more or less complete form, or not at all. A few notes on the modifications required, with details of a few specific equipments, may be given, however, as a guide to those interested.

The most popular and most readily available communication receiver is undoubtedly the R1155. With its associated transmitter, the T1154, this set was produced in thousands for the services. It has a convenient wave-length coverage for domestic and amateur use, the medium and long wave broadcast ranges being included, and the short wave ranges extending to the 18 mc/s region. There is also a band covering the frequencies below the 'long wave' range. The operation is straightforward, the dial readings and the wave-change switch being linked by colour coding, the volume control being available either for RF or AF control. A six-way switch is used to select the services required, one position giving manual RF gain control and fixed AF gain, a second manual control of AF gain and AVC for the RF, and the other positions being concerned with the automatic homing device of the DF system.

The DF circuits will not be required in most cases, but they may be left in place without harm. There are three valves concerned, and these may be removed to reduce the current drain. Most of the smaller panel controls are concerned with the DF section of the circuit, and do not affect the communications receiver section. A B.F.O. circuit and a filter are provided for CW reception.

This equipment is intended to be operated from motor generators running on the 24 volt battery supply of the aircraft or vehicle in which they were generally used. It is therefore necessary to provide a power unit to feed the set. This can be of normal design with 220 volts HT and 6.3 volts LT. The drain varies with the particular version being used—there are some six different types. It may be noted that it is as well to include a power output stage in the power pack, as the triode output valve in the set is not really adequate to drive a loudspeaker.

All connections required are made to the right-hand plug of the group of three connectors at the lower right-hand end of the front panel. This

plug carries : Earth, LT +, HT + (main), HT + (standby), Output, and Aerial. All these are generally single leads, the negatives using the earth return. The middle connector is the output to the DF indicators, and the left-hand connector takes the loop aerial leads. These may be ignored for communications use.

The associated transmitter, the T1154, has an aerial input of about 50 watts maximum. The HT is 1,250 volts, on the single way plug and 220 volts on another point. The LT is 6.3 volts. The dials are colour-coded to match the colours on the receiver, and the master control dial in the centre of the lower panel is normally used to switch on both receiver and transmitter generators as required. The transmitter may be used for R/T work with an external pre-amplifier, and an internal oscillator is provided for MCW transmission.

The army receiver type R208 is a useful receiver for short wave work. It covers the 10-60 mc/s range, and has an internal power supply for operation from 100-250 volt mains or 6 volt battery. It is of much heavier construction than the R1155, which is built for aircraft use, has a built-in speaker, and is generally a very useful set. Unfortunately, it is no use for domestic purposes, because of the frequency coverage, though some ranges can be converted, if desired.

There are a number of other communication sets available. Some can be run off the mains on their own power packs, and some have to be modified. In the latter case, it is as well to check the arrangement of the heater connections. It is quite a common practice to use series-parallel connection, so that the input with 6 volt valves is 12 volts, which may be obtained from the standard aircraft accumulator. In most British aircraft, a 24 volt system is used, and this practice is not so frequent, the LT being drawn from 6.3 volt motor generators.

Another class of set that must be mentioned is the transmitter-receiver. This includes the fixed station and walkie-talkie types. None of these are of much value to the average amateur as the transmitter section cannot be used without a license, and in any case does not generally cover any of the amateur bands. The power is generally low, but if that is a temptation to hope that the G.P.O. would not notice illicit transmission, second thoughts are advisable.

These sets sometimes yield useful components, however, and the following types may be noted. The venerable TR9, using a 2 volt valve of 1930 vintage, and an internal 120 volt HT battery, may be regarded as a museum piece. Even the chassis is useless. As for the components . . . ! It is rather grim to think that this was the standard aircraft R/T set for short-haul work as late as 1942, when it was also being used for small ground stations. Incidentally, the transmitter is crystal controlled and the receiver is a 5 valve TRF. Later sets are available, but they use crystal control for the local oscillator, so they may be ignored, though they do offer a better selection of components, and a complete set of valves for a superhet.

The VHF sets appear to be available only in isolated units, which are

normally fitted into a common frame. These are mainly of value for valves and small components.

The walkie-talkies are mainly of value to the miniaturisation fiends. They yield small valves and tiny components, which are not generally usable as the working voltages are low. They are of interest to those working on model aircraft control and the like. A marvellous piece of control gear for a model plane has been seen that was made from walkie-talkie parts.

Transmitters ? Well, those who are authorised to transmit have passed the P.M.G.s examination, and are well equipped to look after themselves. Those who are not need no more temptation than the availability of transmitting gear already provides.

In general, the communication section of radio work is not likely to profit as much from the sale of surplus apparatus as the rest of the electronic sphere. The sets are too specialised, and adaptation too complicated, for the purchase of communication apparatus by this method to be really worthwhile.

Chapter Eight

VALVES

One of the greatest troubles in using ex-service equipment is knowing just what a given valve will do. The commercial type numbers are not always used, and there are at least seven different systems of service numbering. This chapter will consist of notes on as many types of service valves as possible, each section being headed by the designation by which the valve is best known. There would be no point, for example, in heading a section 'VR91' when the valve is better known as the EF50. The alternative names will be given, as far as possible, but there may be many more, and it is as well to depend more on the visual recognition data.

EF50. This valve has probably been used more than any other in service equipments. Its appearance is so unusual that it is easily recognisable. It has a cylindrical metal cover painted pillar-box red and uses a British 9 pin base of the glass type, in which the pins are sealed directly into the glass. Its versatility is proverbial, and many pieces of gear have used nothing else, A notable example was a valve characteristic curve tracer which used nearly forty EF50's.

The versatility is partly due to the fact that the valve may be controlled by the main grid, the suppressor grid, or both. An example of the use of this was given in connection with switching circuits at the end of chapter 6, and another example is the Transitron circuit. Nominally an RF pentode, the valve is equally useful at low frequencies as a high gain amplifier and in many other circuits.

The limiting values are : Anode and screen supply voltages, 550 volts ; Anode and screen voltages, 300 volts ; Cathode current, 15 mA ; Anode Dissipation, 3 watts ; Screen Dissipation, 1.7 watts. The mutual conductance is 6.5 mA/v (max.), and this can be controlled by varying the voltage on the control grid or suppressor. An amplification factor of 75 is obtainable. It will operate up to and beyond 100 mc/s without loss of efficiency, and may be used very effectively at television frequencies.

Altogether a useful valve. Further data may be found in valve lists. The valve is a Mullard prototype.

Like all successful valves, the EF50 was followed by many variations, including one consisting of two complete EF50 electrode systems mounted end to end, and sealed into one envelope. This valve is characterised by a container similar to that of the EF50, but nearly twice as long, and painted matt black to help to radiate the not inconsiderable heat generated. A similar, if not identical, commercial version is the Mullard EF55. It is intended mainly for use as a video-frequency amplifier, and has the unusally high mutual conductance of 12mA/volt.

A more orthodox variation was the VR136, or EF54. This is very similar to the EF50, and has, in fact, been described as "an EF50 with improvements". It has a higher slope, but has not the same suppressor grid characteristics. Whereas AVC can be applied to the suppressor grid of the EF50, thus leaving the control grid free to give linear amplification, this is not so practicable with the EF54. Its upper frequency limit is over 300 mc/s.

A valve often used with the EF50 and its variations is the EC52, or VR137. This is similar in construction to the EF50, but is a triode. The metal container is omitted and the structure and the connections are clearly visible. The leads to the electrodes are remarkably short, and the valve will oscillate at frequencies up to 400 mc/s. It is only fair to say that at this frequency the tuning inductance and capacity are entirely provided by the leads, and the circuit consists of an RF choke from HT to anode, a 10 pF condenser from anode to grid, and a 25 kohm resistor from grid to cathode, the latter being earthed. Those who care to work it out will find that the Colpitts circuit is employed. The maximum anode voltage is 400, and the dissipation limit is 7.5 watts.

The EC52 should not be confused with the EC54, which is somewhat similar at first glance. The EC54 is a grounded grid triode and the electrode assembly is supported by relatively massive fins in the centre of the envelope, whereas the electrode system of the EC52 is vertical, near and parallel to the wall of the envelope.

The EC52 makes a very good oscillator, and can be used in VHF superhet or super-regenerative circuits with great success. It may also be used in signal generators, not to speak of small transmitters. The EC54 is essentially an amplifier, but can be used as an oscillator if necessary.

This completes the main types of valve using the glass 9 pin base. The next type of valve employs the Mazda Octal base, and a word of warning is necessary here. At first glance, the difference between the two types of octal base is not noticeable, and only too often is discovered when the valve-holder has been fitted and wired, and an attempt is made to insert the valve. It is just as well to check this point at an early stage. The connections, by the way, are completely different. The heaters, for example, go to pins 1 and 8, instead of the usual 2 and 7.

VR65. There are two variations of the VR65 : the VR65A and the VR116. All are derived from the Mazda SP41, a fairly orthodox RF pentode with top-cap grid. These valves run second to the EF50 in numbers in ex-service equipment, and were used for very similar purposes, the choice between them in many cases being dependent on the relative supply positions. The VR65 and the VR116 have 6.3 volt heaters, while the VR65A, like the prototype, has a 4v 1a heater. The 6.3v heaters take about .7a.

These valves are useful, apart from their originally intended application as RF amplifiers, for all kinds of pulse circuits and are found in large quantities in radar pulse units, as is the EF50. It is mainly as amplifiers that they will interest the experimenter, however, since the EF50 is generally better for pulse work. A fine example of their use in this connection may be seen in the ' Monica ' radar receiver, which has a 13 mc/s IF of about 2 mc/s bandwidth employing five VR65's. The local oscillator is a VR137, and the RF and mixer stages are VR136's. Many of these sets have been modified to act as vision receivers, and with remarkably little alteration give quite good results.

These valves have not got quite as good a VHF performance as the EF50, and the maximum useful amplification limit is below 45 mc/s. They should not be used, therefore, as RF amplifiers in television receivers, but make excellent IF amplifiers. The VR116 is slightly better than the VR65, the difference being comparable with that between the EF50 and the EF54.

VR92. The tiny single diode that lurks in odd corners of radar sets has relatively little use in most circuits. It may be used for DC restoration in television sets, and is useful for ' Tieing down ' grids and suppressors in the manner suggested in the notes on time bases and switching circuits. It has been used as a rectifier for a standing bias supply. It has a 6.3 volt O. 15a heater, and requires a special base. The three pins at one end are the heaters and the cathode, and the anode goes to a single pin at the other end. The anode limits are 50 v and 5 mA.

The CV6, alias the VR135, is a most remarkable little valve. It is ' bantam ' size, and the anode and grid are brought out to two top-caps. This valve makes a very healthy oscillator at frequencies up to and exceeding 200 mc/s, the anode and grid connections being convenient for very compact

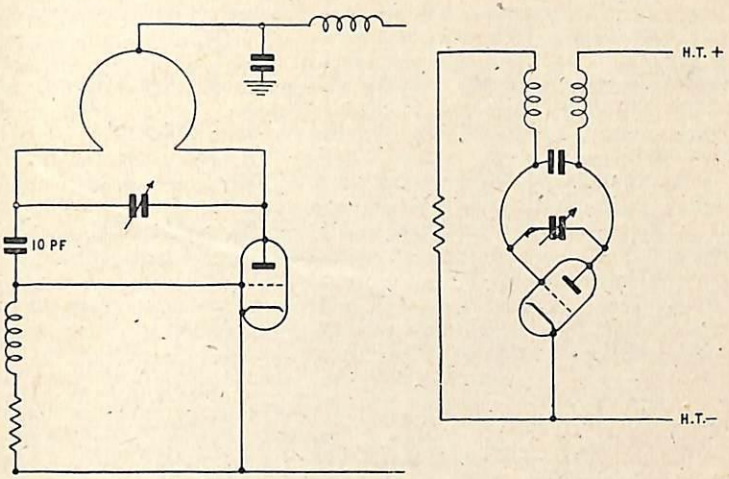

Fig. 19. *Two forms of anode loop oscillator*

and efficient tuned circuits. A circuit of considerable value with this and the EC52 is the anode loop type, in which the tuning coil consists of a single loop (or more) or wire with the HT fed through an RF choke to the centre point. One end of the coil goes to the anode, the other to the grid condenser. The circuit is shown in Fig. 19, and it will be noted that this degenerates to the circuit described for the EC52 at 400 mc/s when the coil and shunting capacity are reduced to nothing.

The base of the CV6 carries only the heater and cathode connections, the usual octal arrangement being used.

Most other valves either bear their normal numbers, are easy to recognise, or are of no use to the amateur. In the first group are the American types, which are marked 6J5, 6SN7, and so on. In the second are such valves as the unmistakeable pigmy double diode the VR54, alias the EB34 which has a 6v 0.2a heater and divided cathode, and will stand 200v at 0.8mA on each anode. The maximum voltage between cathodes is 50, and between cathodes and heaters 75. In the last class are the klystrons, magnetrons, lighthouse valves, aircooled valves, and all other paraphenalia of the VHF and centimetre bands. No space will be wasted on these, since their use is far beyond the capacity of the average amateur's equipment.

Identification, however, is not all the story. Even when a valve is known, it is sometimes difficult to get adequate figures on the performance. There is only one remedy ; find out. The process is not especially difficult, nor does it require very complicated apparatus. A lot may be done with a

voltmeter, a milliammeter, and a few potentiometers. A convenient general set-up is shown in Fig. 20.

Before starting on the actual test, query one : Is the heater (or filament) voltage known ? If it is not known for certain, it must be checked, since no satisfactory measurements can be made otherwise. There are so many possible voltage ratings that the problem is not easy to solve. A methodical procedure is required.

The valve should first be examined to establish type identity. This is not an infallible indication, but reduces the possibilities to some extent. The points to note are : The type of base ; the type of cathode (two-terminal filament, tapped filament, cylindrical heater, flattened heater) ; and the general size of the electrode structure. The last gives some indication of the wattage that may be expected. The base indicates the national origin, and narrows the variety of likely voltages to some extent. The type of cathode narrows the field still further.

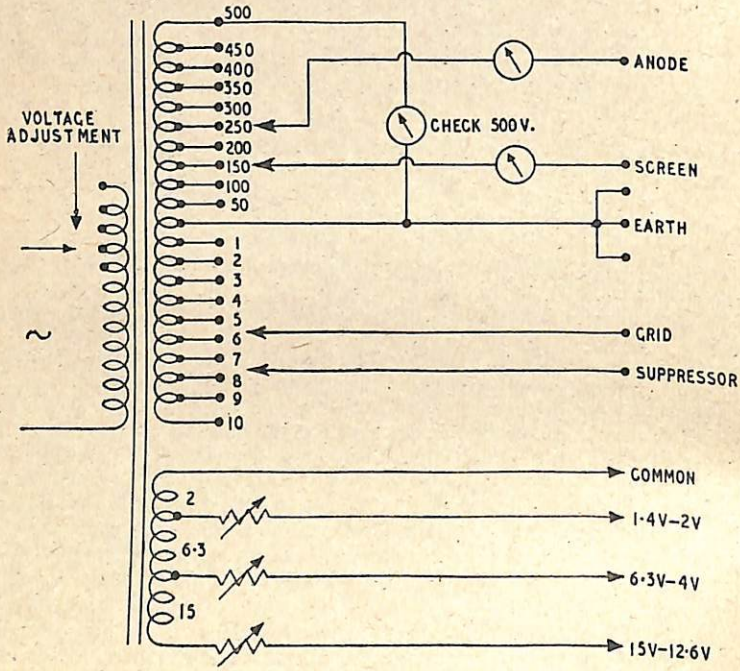

Fig. 20. *Valve test rig*

Having checked these points, the lowest likely voltage should be applied to the valve and the current flow measured. This will distinguish the low voltage types intended primarily for AC operation from the higher voltage types for AC/DC use. Reference to the appropriate group in the following tables will then assist to identify the rating with fair precision.

A few warning notes are necessary. Firstly, the current will change as the valve warms up, and the reading required is the final steady value. Secondly, it must not be expected that the values of current shown will be followed exactly. They are calculated from the general relation between current and voltage as indicated in Fig. 21. This is plotted in terms of percentages of rated voltages. It will be seen that with 25% of the rated voltage applied, a current flow equal to about half the rated value may be expected. Lastly, the lists are not claimed to cover all the many possibilities, and it is as well to check the heat of the cathode by observing the colour. This will also help to differentiate between awkward alternatives. The important point is, after all, to get the current flow right.

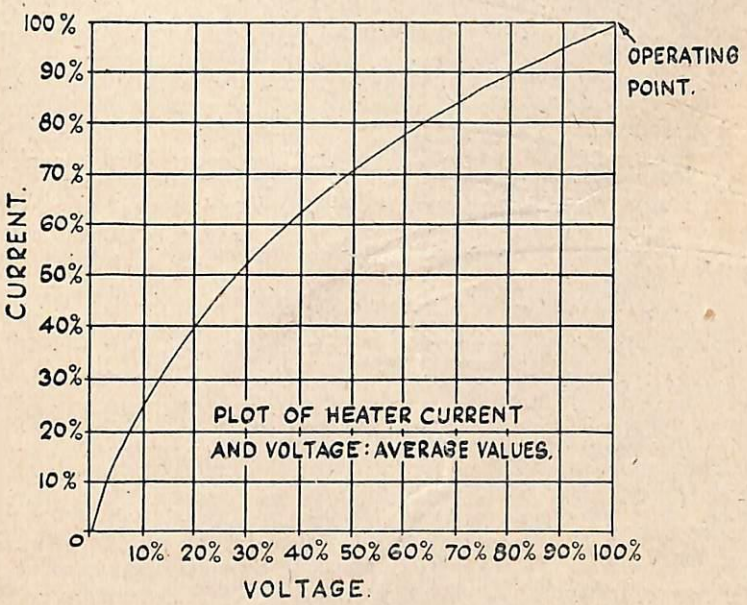

Fig. 21. *Valve heater-current voltage relation*

FILAMENTS WITH NO TAPPING

British 4, 5, 7 and 9 Pin Bases

These valves almost invariably have 2 volt filaments. The smaller valves take 0.1a., or sometimes 0.15a. Power valves take 0.2 to 0.4a., the higher figure being mainly for double pentodes. Rectifiers make heavier demands, and draw an ampère or more. Large power valves, like the PX4 and many rectifiers, require 4v at an ampère or more. These are few in number, and easy to recognise.

Octal, Loctal, B9g, B7g Bases

The newer styles of base are generally associated with the lower voltage filament types. These require 1.4v at 0.05 or 0.1 amp. and operate with a barely visible glow, though in some types (notably acorns) the glow is more pronounced.

TAPPED FILAMENTS

These are designed for alternative connection to suit the supply. The most important is the 2.8 v 0.05 a. type, which may be connected to operate on 1.4v at 0.1a. This is used on the larger type of valve in the 1.4v series. Some of the 1.4v valves are also centre tapped, the tapping being brought out to a cathode terminal. Some types of rectifier employ tapped filaments, which are usually of the 2v 0.5 + 0.5 a. type.

HEATERS

As stated above, the shape of the heater gives an indication of the wattage required to heat it. The round types are the low power design, and higher wattages generally call for the flat design with greater radiating surface.

British Bases

Apply 4v. If the current is greater than 0.5 amp., the valve is of the 4v type. If the current is less than 0.5 amp., the valve is either a pigmy double diode or a universal type. In the latter case, the list below will show the current for each rating with 4v applied, and, for the higher ratings, with 13v applied.

Rating		at 4 v	Rating		at 4 v	at 13 v
13 v	0.15 a	0.09 a	20 v	0.2 a	0.1 a	0.16 a
13 v	0.2 a	0.12 a	20 v	0.3 a	0.15 a	0.24 a
13 v	0.35 a	0.21 a	30 v	0.2 a	0.07 a	0.12 a
13 v	0.65 a	0.39 a	40 v	0.2 a	0.05 a	0.11 a

It can be seen that 13 v 0.15 a. and the 20 v 0.2 a. are not easy to distinguish, but the difference in cathode temperature will help here. The higher voltage valve will scarcely glow at all on 13 v.

Octal, Etc., Bases

Apply 6.3 v. The majority of the valves of this type are rated at 6.3 v, the currents running from 0.2 to 0.9 amps. and above the higher currents belonging to the large power groups. Reference to the following table, and observation of the cathode temperature will enable most types to be identified.

Rating		Rating		at 6.3 v	at 12.6 v	at 25 v
6.3 v	0.2 a	A 12.6 v	0.15 a	0.11 a	0.15 a	——
6.3 v	0.3 a	O 13 v	0.16 a	0.11 a	0.16 a	——
6.3 v	0.43 a	S 14 v	0.2 a	0.13 a	0.19 a	——
6.3 v	0.45 a	U 14 v	0.3 a	0.19 a	0.28 a	——
6.3 v	0.5 a	O 15 v	0.16 a	0.09 a	0.14 a	——
6.3 v	0.6 a	A 25 v	0.3 a	0.15 a	0.22 a	0.3 a
6.3 v	0.7 a	O 26 v	0.3 a	0.14 a	0.21 a	0.3 a
6.3 v	0.8 a	O 30 v	0.16 a	0.07 a	0.1 a	0.14 a
6.3 v	0.85 a	A 35 v	0.15 a	0.06 a	0.08 a	0.12 a
6.3 v	0.9 a	O 48 v	0.16 a	0.05 a	0.07 a	0.11 a

KEY : A = Standard American Rating. O = Osram prorotypes (Octal bases)
S = Special type (Cossor). U = American UX base only.

An imposing assortment, but not impossible to handle if a careful elimination process is used. It is also useful to note that an odd volt in twenty-five, or even in fourteen, doesn't alter the current much.

Having found the heater voltage of one valve in a piece of equipment, there is no need to check all the other valves on the same LT lines. There may, however, be some valves on a different line, or fed through resistances. This can be checked by point-to-pointing.

The actual process of measuring the characteristics need not be described in detail. A watchful eye should be kept on the grid and anode during the tests, and any tendency to heat up on the part of either of these electrodes should be checked immediately by suitable reduction of applied voltages. It is as well to note the anode dissipation power in such cases, so that a repetition can be avoided. The grid generally heats up when it is positive with respect to the cathode, but some valves require a minimum bias of 1 or 2 to avoid grid current. This is due to the differing potential of the various parts of the heater.

The curves which are most useful are the anode current/anode voltage curves for various grid voltages, but special cases may call for special plots. In the design of Transitron circuits, it is useful to plot screen current against suppressor voltage for various anode voltages.

A point which may arise is the base connection system used. If it is not known, it can be found in much the same manner as that suggested for C.R. Tubes. It is suggested, however, that a diligent study of the available valve lists will reveal many standard rules which will assist this work. The exceptions are equally important, of course. The pleasant surprise of a bargain purchase of a large quantity of 6SN7 double triodes was explained subsequently by the fact that the seller, having tested for heater continuity across pins 2 and 7 of the octal base, had decided that they were all burnt out. In actual fact, the heaters, across pins 7 and 8 were all in good order.

SERVICE VALVES AND THEIR COMMERCIAL EQUIVALENTS

In the valve equivalent list that follows, it should be mentioned that the numbers quoted are not in every case the exact commercial equivalents. Many are special development types having no commercial currency, and manufacturers will not often supply data for these, most of which are represented by the numbers E1148, V1906, etc.

It will be noted that immediately following the commercial equivalent type number, appears a letter enclosed in a bracket. This indicates the manufacturer of the commercial equivalent and the abbreviations that have been used are as follows :

A—American
B—British Thomson-Houston
C—Cossor
D—Mazda
E—Ediswan
F—Electrical & Musical Industries
G—General Electric Co. of Britain
H—Ministry of Supply
M—Mullard
N—British Admiralty
O—Marconi Osram Valve Co.
P—Philips
Q—Hivac
S—Standard Telephone & Cables
T—Tungsram

British Army No.	Commercial Equivalent	British Army No.	Commercial Equivalent	British Army No.	Commercial Equivalent
AD1	DLS10 (E)	ARP6	SP4 (M)	ARS6	S625 (O)
AR4	HL210 (D)	ARP7	42MPT (C)	ARS7	VS24 (O)
AR5	LP2 (O)	ARP8	AC4/Pen (D)	ARS8	PM12V (M)
AR6	LP2 (O)	ARP9	Pen1340 (D)	ARTH2	ECH35 (M)
AR7	4D1 (S)	ARP9a	7D8 (S)	ARTP1	TP22 (D)
AR8	HL23DD (D)	ARP10	PenA4 (M)	ARTP2	TP25 (D)
AR9	L21 (O)	ARP11	TSP4 (M)	AT20	MZ05-20 (M)
AR10	TDD2A (M)	ARP12	VP23 (D)	AT35	DET25 (O)
AR11	4019B (S)	ARP13	VP21 (O)	AT37	ACT6 (F)
AR12	4020A (S)	ARP14	220PT (C)	ATP10	4061A (S)
AR13	4022AR (S)	ARP15	KTW63 (O)	ATP35	PV1-35 (M)
AR14	220RC (C)	ARP16	6J7 (A)	ATP75	PT6 (O)
AR15	220LF (C)	ARP17	6F6 (A)	ATP100	4069A (S)
AR16	220B (C)	ARP18	KT24 (O)	ATS25	807 (A)
AR17	MH4 (O)	ARP19	SP41 (D)	ATS25A	807 (A)
AR20	4021B (S)	ARP20	SP42 (D)	ATS70	4282B (S)
AR21	EBC33 (M)	ARP21	Z62 (O)	AU1	U18 (O)
ARD2	D1 (D)	ARP22	116/Pen (C)	AU3	U12-14 (O)
ARD4	D42 (O)	ARP23	HP4101 (T)	AU3A	MU14 (O)
ARDD1	10D1 (S)	ARP24	22OVPT (C)	AU4	U17 (O)
ARDD3	6H6 (A)	ARP25	KT41 (O)	AU6	GU5 (O)
ARDD5	EB34 (M)	ARP26	KT44 (O)	AU8	U22 (O)
ARH1	X64 (O)	ARP33	MSP4 (O)	AW2	7475 (M)
ARP1	KT2 (O)	ARP34	EF39 (M)	AW3	S130 (C)
ARP2	SP2 (M)	ARP35	EF50 (M)	AW4	STV280/40 (O)
ARP3	9D2 (S)	ARP36	SP61 (D)	AW5	ME41 (D)
ARP4	SP210 (D)	ARP37	QP25 (D)	AW6	EM31 (M)
ARP5	VP2 (M)	ARP38	KTZ73 (O)		

C.V. No.	Commercial Equivalent	C.V. No.	Commercial Equivalent	C.V. No.	Commercial Equivalent
3	E1228 (G)	89	E1380 (G)	191	E1494 (G)
5	GU21 (O)	90	E1368 (G)	192	E1481 (G)
6	E1148 (G)	92	E1232 (G)	199	NT99 (N)
8	E1248 (G)	93	V625 (P)	200	MZ2-200 (D)
9	AL60 (M)	94	DS103.(O)	201	V630 (H)
12	E1191 (G)	100	V1924 (E)	207	ACP4 (E)
13	BT9B (B)	105	E1371 (G)	208	E1487 (G)
15	E1266 (G)	110	VS68 (H)	214	E1531 (G)
18	DET19 (O)	114	E1365 (G)	215	E1497 (G)
19	EHT1 (O)	115	E1415 (G)	216	VR150 (A)
20	V1906 (D)	116	KR6/1 (F)	221	E1516 (G)
22	BT45 (B)	117	E1417 (G)	222	E1489 (G)
24	HL41 (O)	118	VR65 (H)	225	ACT17 (O)
25	4242A (S)	119	XJ (Q)	229	E1336 (G)
26	813 (A)	121	V1920 (E)	230	DV55 (S)
27	4357A (S)	122	E1336 (G)	236	E1465 (G)
28	ACT9 (O)	123	E1330 (G)	240	E1496 (G)
29	E1235 (G)	124	807 (A)	242	GS18 Cine-Tele
30	4270A (S)	125	V2024 (E)	243	4045A (S)
31	U20 (M)	126	E1362 (G)	244	4046A (S)
32	866 (A)	127	S30A (O)	245	4328D (S)
33	4077A (S)	128	SU750 (C)	248	GS16 Cine-Tele
34	MR10 (O)	129	KRN2A (F)	249	4019A (S)
39	S22AF (S)	131	V884 (E)	257	E1457 (G)
41	E1267 (G)	133	6C4 (A)	259	E1495 (G)
42	E1256 (G)	135	DDR3 (H)	261	2T/270K (S)
45	S130 (C)	136	DDR7 (H)	278	E1606 (G)
49	3B/501A (S)	137	DDR26 (H)	281	X61M (O)
51	E1320 (G)	138	V888 (D)	283	6AL5 (A)
52	E1231 (G)	139	V738 (H)	290	E1527 (G)
53	S26A (S)	140	V984 (D)	302	ECH22 (M)
54	VU133A (H)	142	U2 (O)	303	EF22 (M)
55	E1190 (G)	143	U3 (O)	304	EL22 (M)
57	E1271 (G)	144	U4 (O)	305	EV51 (M)
58	E1273 (G)	145	U5 (O)	324	GU8 (O)
63	E1323 (G)	147	U7 (O)	327	EF52 (M)
64	E1342 (G)	148	U8 (O)	346	EZ22 (M)
65	PEN25 (D)	152	GU21 (O)	347	EBC21 (M)
66	RL37 (M)	153	E1411 (G)	358	EF37 (M)
72	V1120 (E)	155	E1190 (G)	379	ACT19 (M)
73	V1120B (E)	171	W21 (O)	384	DET5 (O)
74	XP (Q)	172	E1468 (G)	385	CK502 (A)
75	4313C (S)	173	DDR2 (H)	386	CK505 (A)
78	E1474 (G)	174	E1459 (G)	387	CK506 (A)
79	E1379 (G)	176	XP1.5 (Q)	391	LS650 (S)
82	S27A (S)	178	E1458 (G)	500	6T7G (A)
84	3B/102B (S)	181	ECC31 (M)	501	EBF32 (M)
85	V2023 (E)	185	PM202 (M)	502	LD210 (T)
86	V1507 (H)	187	U19 (O)	503	5W4DT (A)
87	KRN2 (F)	188	E1436 (G)	504	6U5/6G5 (A)
88	DV32 (S)	190	DLS10 (E)	505	MT16 (O)

C.V. No.	Commercial Equivalent	C.V. No.	Commercial Equivalent	C.V. No.	Commercial Equivalent
506	GL8023 (A)	588	6Q7 (A)	645	876 (A)
508	1B49 (A)	589	6Q7GT (A)	647	884 (A)
509	6V6G (A)	590	6SJ7G (A)	648	885 (A)
510	6V6 (A)	591	6SJ7 (A)	649	956 (A)
511	6V6GT (A)	592	6SJ7GT (A)	650	958 (A)
512	6W7G (A)	594	6SH7 (A)	651	991 (A)
515	6Y6G (A)	595	6SH7GT (A)	652	1603 (A)
517	OZ4A (A)	596	45 (A)	653	1611 (A)
520	VP2B (M)	597	879 (A)	654	1612 (A)
522	7B7 (A)	598	715C (A)	655	1613 (A)
523	12Y4 (A)	599	1851 (A)	656	1616 (A)
525	12A6 (A)	600	5CP1 (A)	657	1620 (A)
526	12A6GT (A)	603	10 (A)	658	1622 (A)
529	12AH7GT (A)	604	30 (A)	659	1625 (A)
531	12C8 (A)	606	37 (A)	660	6AC7 (A)
534	12J5 (A)	608	41 (A)	661	6AB7 (A)
535	12J5GT (A)	609	42 (A)	662	8012 (A)
537	12SA7 (A)	610	45 (A)	663	8025 (A)
538	12SA7GT (A)	611	56 (A)	664	9002 (A)
540	12SC7 (A)	612	57 (A)	665	9003 (A)
543	12SK7 (A)	613	58 (A)	666	9004 (A)
544	12SK7GT (A)	614	75 (A)	667	9005 (A)
546	12SQ7 (A)	615	76 (A)	668	35T (A)
547	12SQ7GT (A)	616	77 (A)	669	279A (A)
549	25A6 (A)	617	80 (A)	670	645 (A)
550	25A6GT (A)	618	83 (A)	676	7206A (A)
551	25L6G (A)	619	84 (A)	677	701A (A)
552	25L6 (A)	620	211 (A)	679	703A (A)
553	25L6GT (A)	621	801 (A)	683	316A (A)
555	25Z5 (A)	622	802 (A)	684	274B (A)
558	25Z6 (A)	623	803 (A)	686	VR105 (A)
559	25Z6GT (A)	624	804 (A)	687	GL446B (A)
561	35L6 (A)	625	805 (A)	688	2C43 (A)
562	35L6GT (A)	626	808 (A)	690	RK48A (A)
564	35Z3 (A)	627	810 (A)	691	357A (A)
565	35Z3GT (A)	628	811 (A)	692	OZ4 (A)
567	35Z5 (A)	629	814 (A)	693	HF300 (A)
568	35Z5GT (A)	630	826 (A)	694	12SG7 (A)
571	50L6GT (A)	631	828 (A)	695	700B (A)
572	6X5G (A)	632	829 (A)	696	700C (A)
573	6X5 (A)	634	832 (A)	697	12SJ7 (A)
574	6X5GT (A)	635	833 (A)	698	12SJ7GT (A)
575	5U4G (A)	636	836 (A)	699	700D (A)
578	6A8G (A)	637	837 (A)	700	12SR7 (A)
579	6A8 (A)	638	838 (A)	702	830B (A)
580	6A8GT (A)	639	843 (A)	703	12K8 (A)
581	6C5G (A)	640	860 (A)	704	RK20A (A)
582	6C5 (A)	641	861 (A)	705	1D5GP (A)
583	6C5GT (A)	642	872 (A)	706	6U7G (A)
585	6C6 (A)	643	874 (A)	707	HK54 (A)
587	6Q7G (A)	644	875 (A)	709	RX235 (A)

C.V. No.	Commercial Equivalent	C.V. No.	Commercial Equivalent	C.V. No.	Commercial Equivalent
710	368A (A)	780	1LH4 (A)	850	6AK5 (A)
711	32 (A)	781	1LN5 (A)	851	6B4G (A)
712	38 (A)	782	1R5 (A)	852	6C4 (A)
716	8013A (A)	783	1S4 (A)	854	6C7 (A)
717	5R4GY (A)	784	1S5 (A)	855	6C21 (A)
718	5FP7 (A)	785	1T4 (A)	856	6G8G (A)
719	2J21A (A)	786	1T5 (A)	857	6H7 (A)
723	1619 (A)	787	2A7 (A)	858	6J6 (A)
724	816 (A)	788	832A (A)	859	6J8G (A)
725	1B24 (A)	789	3C24 (A)	860	6K5G (A)
726	35Z3 (A)	792	2C22 (A)	861	6K5GT (A)
727	1N21 (A)	794	2D2 (M)	862	6L5G (A)
728	1P5GT (A)	795	2D4A (M)	864	6P7G (A)
729	5V4G (A)	796	2D13C (M)	865	6SD7GT (A)
730	6A3 (A)	797	2D21 (A)	866	6SJ7Y (A)
731	6F6GT (A)	798	2E22 (A)	867	6SR7 (A)
732	6W4 (A)	802	2C26 (A)	870	6V7G (A)
734	228A (A)	803	2V3 (A)	871	6Z5 (A)
735	845 (A)	804	2V3G (A)	872	6Z7G (A)
736	905 (A)	805	50Y6GT (A)	873	6ZY5G (A)
737	906 (A)	807	3A4 (A)	875	2C21 (A)
738	953 (A)	808	3A5 (A)	876	7A6 (A)
742	FG67 (A)	809	3A/105B (S)	877	7A7 (A)
750	O1A (A)	811	1291 (A)	878	7A8 (A)
751	HY75 (A)	812	3B22 (A)	879	7B4 (A)
752	OA4G (A)	814	3BP1 (A)	880	7B5 (A)
753	1A3 (A)	815	1299 (A)	881	7B5LT (A)
754	1A4P (A)	816	3DP1 (A)	882	7B6LM (A)
755	1A5G (A)	818	3Q4 (A)	883	7B8LM (A)
756	1A5GT (A)	819	3Q5 (A)	884	7BP7 (A)
757	1A6 (A)	820	3S4 (A)	885	7C5 (A)
758	1B4P (A)	822	EL3C (P)	886	7C5LT (A)
759	1B5 (A)	823	4C29 (A)	887	7C6 (A)
760	1B7GT (A)	824	HK257 (A)	888	7D7 (A)
761	1B22 (A)	825	4SHA (C)	889	7D8 (A)
764	1D5 (A)	826	4THA (C)	890	7E5 (A)
765	1D7G (A)	828	4TPB (C)	891	7E6 (A)
766	1E5GT (A)	830	4TSP (C)	892	7E7 (A)
767	1F4 (A)	833	89 (A)	893	7F7 (A)
768	1F5G (A)	834	5B/300B (S)	894	1232 (A)
769	1F6 (A)	837	12C8SPEC (A)	895	7H7 (A)
770	1F7GV (A)	840	5H4 (A)	896	7K7 (A)
771	1G5G (A)	841	5U4GT (A)	897	7J7 (A)
772	1G6G (A)	842	5W4G (A)	898	7N7 (A)
773	1G6GT (A)	843	6AB5 (A)	899	7Q7 (A)
774	1H4G (A)	844	6AC5G (A)	900	7R7 (A)
775	1LA6 (A)	845	6AC5GT (A)	901	7Y4 (A)
776	1LB4 (A)	846	6AC7 (A)	902	7W7 (A)
777	1LC5 (A)	847	6AF6G (A)	904	892R (A)
778	1LC6 (A)	848	6AG5 (A)	906	1602 (A)
779	1LD5 (A)	849	6AJ7 (A)	908	12A5 (A)

C.V. No.	Commercial Equivalent	C.V. No.	Commercial Equivalent	C.V. No.	Commercial Equivalent
909	12A7 (A)	1035	QP21 (O)	1099	X66 (O)
910	12A8GT (A)	1037	MH4 (O)	1100	KTW62 (O)
911	12B8GT (A)	1038	MHL4 (O)	1101	MHLD6 (O)
916	12H6 (A)	1039	MU14 (O)	1102	BL63 (O)
917	12J7 (A)	1040	PX25 (O)	1103	EM35 (M)
918	12K7 (A)	1041	PM12M (M)	1104	PT15 (O)
919	12SF5 (A)	1043	210PG (C)	1105	ML6 (O)
920	12SF5GT (A)	1044	210DDT (C)	1106	9D2 (S)
921	12SF7 (A)	1045	X56 (O)	1107	15D2 (S)
922	12SH7 (A)	1046	PT25H (O)	1108	8D2 (S)
924	12SL7 (A)	1047	TZ05-20 (M)	1109	4D1 (S)
925	12SN7 (A)	1049	210SPT (C)	1110	S130 (C)
927	12Z3 (A)	1050	HL2K (O)	1113	U17 (O)
929	13SPA (C)	1051	Pen220A (D)	1117	41MTL (C)
930	14F7 (A)	1052	EL32 (M)	1118	KT2 (O)
931	15 (A)	1053	EF39 (M)	1119	DDL4 (C)
932	2C40 (A)	1054	EB34 (M)	1120	SU2150A (C)
933	4C30 (A)	1055	EBC33 (M)	1121	T41 (D)
934	4B30 (A)	1056	EF36 (M)	1122	41MXP (C)
936	24A (A)	1057	EK32 (M)	1123	EF8 (M)
937	25A7 (A)	1059	955 (A)	1124	HP4101 (T)
938	25AC5 (A)	1060	807 (A)	1125	MS/PenB (C)
939	25B6 (A)	1061	RK34 (A)	1126	4SH (C)
940	25B8 (A)	1062	TY1-50 (M)	1127	Pen46 (D)
941	HK24 (A)	1064	U12-14 (O)	1128	GT1C (O)
942	25Y5 (A)	1065	SP61 (D)	1129	MS/Pen (C)
943	26 (A)	1066	P61 (D)	1130	HL23 (D)
944	27 (A)	1067	6J5 (A)	1134	HVR2 (M)
945	28D7 (A)	1068	STV280/40 (O)	1136	EF54 (M)
946	28D7GT (A)	1069	STV280/80 (O)	1137	EC52 (M)
947	31 (A)	1070	7475 (M)	1141	DPQ (C)
948	32L7 (A)	1071	5U4 (A)	1143	GT1A (O)
949	33 (A)	1072	GU5 (O)	1151	PM3 (M)
977	TWINCV55 (G)	1073	H63 (O)	1152	PM4DX (M)
995	6AJ5 (A)	1074	6J7 (A)	1153	PM254 (M)
996	1637 (A)	1075	KT66 (O)	1154	PM4DX (M)
998	2000T (A)	1076	DA41 (O)	1155	DEQ (O)
999	3C22 (A)	1077	EM31 (M)	1156	DEQ (O)
1000	VR109A (H)	1078	D1 (D)	1158	PM14 (M)
1018	215SG (C)	1079	KT8 (O)	1159	PM14 (M)
1019	PM2 (M)	1080	4307A (S)	1160	ML4 (O)
1020	220P (C)	1081	4052A (S)	1161	ML4 (O)
1021	210LF (C)	1082	220TH (C)	1163	PD220A (D)
1022	220PA (C)	1083	210VPT (C)	1164	AC/SG (D)
1023	230XP (C)	1087	14L (C)	1165	VMS4 (O)
1025	DET25 (O)	1088	832 (A)	1166	LP2 (O)
1027	210LF (C)	1091	EF50 (M)	1167	PM24A (M)
1028	220VSG (C)	1092	EA50 (M)	1168	ACO44 (M)
1029	ESU150 (E)	1095	954 (A)	1169	VMP4G (O)
1032	220B (C)	1096	5B/502A (S)	1170	D41 (O)
1034	DET3 (O)	1097	ECR60 (M)	1171	AT4 (M)

C.V. No.	Commercial Equivalent	C.V. No.	Commercial Equivalent	C.V. No.	Commercial Equivalent
1174	KT42 (O)	1281	KTW61 (O)	1345	TP25 (D)
1175	AP4 (M)	1282	MSP4 (O)	1347	ECH35 (M)
1176	ZA1 (O)	1283	SP4 (M)	1356	U22 (O)
1178	DO30 (M)	1285	ECC31 (M)	1359	ME41 (D)
1179	ML4 (O)	1286	EL35 (M)	1361	MZ05-20 (M)
1180	244V (M)	1287	KT32 (O)	1363	DET16 (O)
1181	KT41 (O)	1288	DET12 (O)	1364	807 (A)
1182	H42 (O)	1290	SU2150A (C)	1365	4282B (S)
1183	W42 (O)	1291	SU2150A (C)	1369	4061A (S)
1184	A373 (O)	1300	10D1 (S)	1370	PV1-35 (M)
1186	6F6 (A)	1301	6H6 (A)	1371	PT6 (O)
1187	D41 (O)	1302	D42 (O)	1372	4069A (S)
1188	N43 (O)	1303	HL210 (D)	1374	807 (A)
1189	AC6/Pen (D)	1304	LP2 (O)	1400	C1C (P)
1190	2×ACP4 (D)	1306	HL23DD (D)	1401	CL33 (M)
1191	KTZ41 (O)	1307	L21 (O)	1402	CY31 (M)
1192	Z62 (O)	1308	TDD2A (M)	1403	DD41 (E)
1193	X65 (O)	1309	4019B (S)	1405	E1199 (G)
1194	X41 (O)	1310	4020A (S)	1407	Pen45 (E)
1195	KTW63 (O)	1311	4022AR (S)	1408	P41 (E)
1196	AC5/PenDD (D)	1312	220RC (C)	1409	SP2 (M)
1197	RL18 (M)	1313	220LF (C)	1410	TH2 (M)
1198	ACP4 (D)	1314	DLS10 (E)	1411	TH41 (D)
1200	202 (O)	1316	4021B (S)	1412	TV4 (M)
1201	4317 (S)	1317	S625 (O)	1413	UU6 (D)
1202	304 (O)	1318	VS24 (O)	1415	4011A (S)
1206	D060 (M)	1319	PM12V (M)	1419	11D3 (S)
1207	ES450 (E)	1320	SP2 (M)	1420	4078A (S)
1208	PM256 (M)	1321	9D2 (S)	1422	3D/100A (S)
1219	DA100 (O)	1322	SP210 (D)	1424	20A1 (S)
1220	4033A (S)	1323	VP2 (M)	1425	7D5 (A)
1221	PZI-75 (M)	1324	SP4 (M)	1426	EK2 (M)
1222	ACT6 (F)	1325	42MPT (C)	1427	EF9 (M)
1223	DET5 (O)	1326	AC4/Pen (D)	1428	EBC3 (M)
1235	DET12 (O)	1327	Pen1340 (D)	1429	EL2 (M)
1237	PM24D (M)	1328	7D8 (S)	1430	ACSP3 (E)
1238	PM24D (M)	1329	PenA4 (M)	1431	ACT16 (O)
1240	PZ1-35 (M)	1330	TSP4 (M)	1433	EC31 (M)
1246	PM202 (M)	1331	VP23 (D)	1434	EM4 (M)
1250	4279A (S)	1332	VP21 (O)	1435	GU20 (O)
1252	4212E (S)	1333	220PT (C)	1438	KT61 (O)
1261	RX3-120 (M)	1334	KT24 (O)	1439	MT9F (O)
1262	GU1 (C)	1335	SP41 (D)	1440	MT9L (O)
1263	RG1-125 (M)	1336	SP42 (D)	1441	MT12A (O)
1264	U18 (O)	1337	116/Pen (C)	1442	MT14 (O)
1265	U15 (O)	1338	220VPT (C)	1443	U10 (O)
1266	U15 (O)	1340	KT44 (O)	1444	42SPT (C)
1267	U4020 (D)	1341	MSP4 (O)	1445	4012A (S)
1268	5Y3 (A)	1342	QP25 (D)	1446	4017B (S)
1279	MU2 (O)	1343	KTZ73 (O)	1447	4030C (S)
1280	X64 (O)	1344	TP22 (D)	1449	4064B (S)

C.V. No.	Commercial Equivalent	C.V. No.	Commercial Equivalent	C.V. No.	Commercial Equivalent
1450	4228A (S)	1701	XLO (Q)	1818	1H5G (A)
1451	4274A (S)	1702	XP (Q)	1819	6P5GT (A)
1452	4300A (S)	1718	ACTP (D)	1820	1H5GT (A)
1455	225DU (C)	1720	XL1.5 (Q)	1821	1N5G (A)
1456	Pen383 (E)	1721	XP1.5 (Q)	1823	1N5GT (A)
1457	VP133 (E)	1722	A901 (O)	1824	1Q5G (A)
1458	41MP (C)	1732	ML4 (O)	1826	1Q5GT (A)
1459	MU2 (O)	1749	205D (A)	1829	1T5GT (A)
1460	X41 (O)	1750	33A/100A (S)	1831	2A3 (A)
1462	A915 (O)	1751	34 (A)	1834	2A5 (A)
1463	CBL31 (M)	1752	35/51 (A)	1837	2B7 (A)
1471	4049A (S)	1753	35A5 (A)	1846	5T4 (A)
1502	KT32 (O)	1754	35TG (A)	1849	5W4 (A)
1503	KT33C (O)	1755	1626 (A)	1851	5X4G (A)
1505	MH41 (O)	1756	1629 (A)	1852	5X4 (A)
1569	R3 (S)	1757	9001 (A)	1854	5Y3G (A)
1572	807 (A)	1758	1L4 (A)	1856	5Y3GT (A)
1573	4074B (S)	1759	2C26A (A)	1857	5Y4G (A)
1574	SP41 (D)	1762	6AK6 (A)	1861	5Z3 (A)
1575	U52 (O)	1763	6J4 (A)	1863	5Z4G (A)
1576	KT44 (O)	1769	2A6 (A)	1864	5Z4 (A)
1577	KT44 (O)	1770	7A4 (A)	1867	6A6 (A)
1578	EF50 (M)	1771	39/44 (A)	1870	6A7 (A)
1579	954 (A)	1772	47 (A)	1873	6AB7 (A)
1600	CAT1 (O)	1773	82 (A)	1878	6AD7G (A)
1601	CAR (O)	1774	112A (A)	1882	6AG7 (A)
1602	CAR4 (O)	1775	36 (A)	1885	6B5 (A)
1606	CAT2 (O)	1776	6D7 (A)	1887	6B6G (A)
1610	MT4 (O)	1777	7C7 (A)	1891	6B7 (A)
1611	MR4 (O)	1778	101D (A)	1893	6B8G (A)
1614	ES1500 (E)	1779	102D (A)	1894	6B8 (A)
1618	ES25OM (E)	1780	30TWIN (A)	1896	6C8G (A)
1620	DET6 (O)	1781	310B (A)	1900	6D6 (A)
1628	GU8 (O)	1782	340A (A)	1902	6D8G (A)
1642	DER (O)	1784	6AK7 (A)	1906	6E5 (A)
1650	LS5A (O)	1790	7Z4 (A)	1908	6F5G (A)
1656	LS8 (O)	1794	759 (A)	1909	6F5 (A)
1658	LS9B (O)	1796	DW4/350 (M)	1910	6F5GT (A)
1661	DL (O)	1797	4081A (S)	1911	6FG (A)
1665	DH (O)	1798	2051 (A)	1912	6F6 (A)
1667	LS8A (O)	1799	350B (A)	1915	6F7 (A)
1669	P625 (O)	1800	1A7G (A)	1917	6F8G (A)
1673	HL2 (O)	1802	1A7GT (A)	1918	6F8 (A)
1677	ACS2 (D)	1803	1C5G (A)	1926	6G6G (A)
1678	HLA2 (S)	1805	1C5GT (A)	1929	6H6G (A)
1683	MKT4 (O)	1806	1D5GT (A)	1930	6H6 (A)
1684	APP4C (T)	1811	1D8GT (A)	1931	6H6GT (A)
1691	DDL4 (C)	1812	1E7G (A)	1932	6J5G (A)
1695	DH30 (O)	1815	6Q5G (A)	1933	6J5 (A)
1697	X41 (O)	1816	6Y3G (A)	1934	6J5GT (A)
1698	A819 (O)	1817	1G4 (A)	1935	6J7G (A)

C.V. No.	Commercial Equivalent	C.V. No.	Commercial Equiavlent	C.V. No.	Commercial Equivalent
1936	6J7 (A)	2512	420TDD (C)	2595	259A (A)
1937	6J7GT (A)	2514	43 (A)	2597	262B (A)
1938	6K6G (A)	2529	45IU (C)	2598	264A (A)
1940	6K6GT (A)	2530	45Z5 (A)	2599	264C (A)
1941	6K7G (A)	2531	46 (A)	2600	267B (A)
1942	6K7 (A)	2532	49 (A)	2601	271A (A)
1943	6K7GT (A)	2533	50 (A)	2602	272A (A)
1944	6K8G (A)	2534	50L6 (A)	2603	274A (A)
1945	6K8 (A)	2535	53 (A)	2604	275A (A)
1946	6K8GT (A)	2536	53A (A)	2605	282A (A)
1947	6L6G (A)	2537	55 (A)	2608	300A (A)
1948	6L6 (A)	2538	59 (A)	2609	300B (A)
1950	6L7G (A)	2541	71A (A)	2611	304TH (A)
1951	6L7 (A)	2543	73 (A)	2612	307A (A)
1953	6N6G (A)	2544	78 (A)	2613	310A (A)
1954	6N6 (A)	2545	79 (A)	2614	311A (A)
1956	6N7G (A)	2546	81 (A)	2615	313C (A)
1957	6N7 (A)	2547	83V (A)	2616	314A (A)
1958	6N7GT (A)	2548	84 (A)	2617	323A (A)
1960	6R6G (A)	2549	85 (A)	2618	327A (A)
1962	6R7G (A)	2552	100TH (A)	2619	328A (A)
1963	6R7 (A)	2553	101F (A)	2620	329A (A)
1964	6R7GT (A)	2554	111A (A)	2621	330B (A)
1966	6SA7 (A)	2556	117L7 (A)	2622	331A (A)
1967	6SA7GT (A)	2557	117N7 (A)	2623	332A (A)
1969	6SC7 (A)	2558	117Z6 (A)	2624	337A (A)
1970	6SC7GT (A)	2560	121A (A)	2625	338A (A)
1972	6SF5 (A)	2561	122A (A)	2626	346A (A)
1973	6S5GT (A)	2562	164V (M)	2627	349A (A)
1974	6S7G (A)	2563	204A (A)	2628	349B (A)
1975	6S7 (A)	2565	2050 (A)	2629	350A (A)
1978	6SG7 (A)	2566	205E (A)	2630	351A (A)
1981	6SK7 (A)	2567	205F (A)	2631	352A (A)
1982	6SK7GT (A)	2569	210DET (C)	2632	354A (A)
1985	6SL7GT (A)	2570	210HF (C)	2633	362A (A)
1988	6SN7GT (A)	2571	210HL (C)	2634	367 (A)
1990	6SQ7 (A)	2574	210VPA (C)	2636	375A (A)
1991	6SQ7GT (A)	2576	4C21 (A)	2637	388A (A)
1993	6SS7 (A)	2577	212E (A)	2640	405BU (C)
1995	6ST7G (A)	2579	218 (A)	2643	2C40 (A)
1996	6ST7 (A)	2580	220C (C)	2644	460BU (C)
1999	1V (A)	2582	220VS (C)	2645	506BU (C)
2500	35Z4GT (A)	2584	231D (A)	2654	715A (A)
2501	40 (A)	2586	240B (C)	2655	715B (A)
2502	41FP (C)	2587	242C (A)	2657	800 (A)
2503	41MH (C)	2588	244A (A)	2658	806 (A)
2504	41MHL (C)	2589	250TH (A)	2660	809 (A)
2505	41MPG (C)	2591	100TH (A)	2661	812 (A)
2506	41MPT (C)	2592	256B (A)	2663	815 (A)
2508	41STH (C)	2593	257A (A)	2664	822 (A)
2511	420T (C)	2594	258B (A)	2665	825 (A)

C.V. No.	Commercial Equivalent	C.V. No.	Commercial Equivalent	C.V. No.	Commercial Equivalent
2666	829B (A)	2756	4260A (S)	2936	4B22 (A)
2668	846 (A)	2759	4304 (S)	2938	EL33 (M)
2669	849 (A)	2760	4304B (S)	2940	EL36 (M)
2670	849H (A)	2761	4304BB (S)	2941	EL50 (M)
2671	851 (A)	2765	4673 (S)	2944	ESU1500 (E)
2672	852 (A)	2768	8003 (A)	2945	ESU75 (E)
2673	857B (A)	2769	9006 (A)	2946	ESU150 (E)
2674	863 (A)	2800	A40 (C)	2947	ESU300 (E)
2675	864 (A)	2803	A915 (O)	2948	ESU450 (E)
2676	865 (A)	2804	A915A (O)	2949	F123A (A)
2679	866JR (A)	2805	A924 (C)	2954	FC2A (M)
2680	868 (A)	2806	AC/2HL (D)	2955	FC4 (M)
2683	878 (A)	2808	AC/Pen (D)	2956	FC13C (M)
2685	880 (A)	2809	AC/5Pen (D)	2959	3B21 (A)
2686	889 (A)	2811	AC/HL (D)	2960	FP54 (A)
2687	889R (A)	2813	AC/HLDD (D)	2967	8020 (A)
2688	89IR (A)	2815	AC/P (D)	2973	GU7 (O)
2689	893R (A)	2819	AC/S (D)	2977	H2 (O)
2690	904V (M)	2822	AC/SG (D)	2978	H12 (O)
2691	913 (A)	2823	AC/SP3 (D)	2979	H30 (O)
2692	918 (A)	2830	AC/TH1 (D)	2981	H410 (O)
2693	929 (A)	2832	AC/VP2 (D)	2982	H610 (O)
2694	930 (A)	2833	AF3 (P)	2985	HD24 (O)
2695	931 (A)	2836	APP4G (T)	2986	HD203A (A)
2696	931A (A)	2839	AR300 (A)	2987	HF100 (A)
2697	935 (A)	2860	AZ1 (P)	2988	HF200 (A)
2700	957 (A)	2861	AZ2 (P)	2989	HK354E (A)
2701	958A (A)	2862	AZ31 (P)	2991	HL2 (O)
2704	7E5/1201 (A)	2864	B21 (O)	2996	HL41DD (D)
2705	1203 (A)	2865	B30 (O)	2998	HL133 (D)
2706	7C4/1203A (A)	2871	CAT6 (O)	2999	HL133DD (D)
2707	1231 (A)	2872	CAT9 (O)	3500	HL210 (O)
2709	1294 (A)	2874	CK1005 (A)	3501	HL610 (O)
2710	3D6/1299 (A)	2875	CL4 (P)	3502	HL1320 (D)
2711	1500T (A)	2887	DAC1 (M)	3503	HLDD1320 (D)
2712	1609 (A)	2889	DD620 (C)	3505	HY114B (A)
2713	1610 (A)	2890	DDT (T)	3506	HY615 (A)
2714	1614 (A)	2891	DE5 (O)	3515	KB2 (M)
2715	1630 (A)	2892	DE5B (O)	3516	KK2 (M)
2716	6SC7(SEL) (A)	2899	DET9 (O)	3519	KT30 (O)
2717	1729 (M)	2900	DET10 (O)	3520	KT31 (O)
2718	1876 (P)	2907	DF1 (M)	3527	KTW73M (O)
2719	1924 (P)	2909	DH73M (O)	3530	KTZ73 (O)
2722	3025 (A)	2910	DK1 (M)	3531	L2 (D)
2723	869B (A)	2911	DL2 (M)	3532	L21 (O)
2733	3951 (A)	2912	DL63 (O)	3533	L22DD (D)
2734	4003A (S)	2925	EBF2 (M)	3534	L30 (O)
2735	4015A (S)	2926	EBL31 (M)	3538	L610 (O)
2743	4033AF (S)	2927	EC50 (M)	3541	LS6A (O)
2746	4064A (A)	2929	ECH3 (M)	3546	MHD4 (O)
2755	4251AX (S)	2930	ECH33 (M)	3552	MPT4K (O)

C.V. No.	Commercial Equivalent	C.V. No.	Commercial Equivalent	C.V. No.	Commercial Equivalent
3553	MS4B (O)	3649	PM22 (M)	3743	U5 (O)
3554	MPT42 (O)	3652	PT5 (O)	3744	U6 (O)
3562	MSP41 (O)	3653	PT6 (O)	3751	U21 (O)
3564	MT12 (O)	3654	PT11 (O)	3752	U30 (O)
3567	MU1 (D)	3655	PT425 (O)	3753	U31 (O)
3571	MVSPen (C)	3657	PV05-15 (M)	3758	UR3C (M)
3572	MVSPenB (C)	3658	PV1-35 (M)	3759	UU4 (D)
3573	MZ05/20 (M)	3667	RG1-250 (M)	3761	UU7 (D)
3574	MZ1/76 (M)	3670	RG4-100 (M)	3787	VP2 (M)
3576	MX40 (O)	3672	RK28 (A)	3788	VP4 (M)
3578	PM22D (M)	3673	RK28A (A)	3790	VP13C (M)
3579	PT5E (O)	3674	RK31 (A)	3793	VP24 (D)
3582	VP4B (M)	3677	RK47 (A)	3794	VP210 (D)
3587	705A (A)	3679	RK49 (A)	3795	VP215 (D)
3590	708A (A)	3680	RK60 (A)	3796	VP1322 (D)
3593	713 (A)	3683	RKR47 (A)	3798	VR75 (A)
3594	717A (A)	3688	2C33 (A)	3799	VR90 (A)
3599	829A (A)	3690	RZ1-150 (M)	3800	VS2 (O)
3601	7193 (A)	3691	S23 (O)	3802	VS24 (O)
3620	P220 (D)	3695	S215 (C)	3803	VS24K (O)
3621	P410 (O)	3696	S215A (C)	3805	W30K (O)
3622	P610 (O)	3698	S610 (O)	3806	W31 (O)
3623	PA40 (D)	3702	SG215 (C)	3810	WD30 (O)
3626	Pen4B (M)	3703	SP4B (M)	3816	X21 (O)
3631	Pen45DD (D)	3704	SP13C (M)	3818	X22 (O)
3633	Pen231 (D)	3715	SW5 (C)	3819	X24 (O)
3634	Pen428 (M)	3721	T4D (M)	3821	X31 (O)
3635	Pen1340 (D)	3722	T20 (A)	3823	X41 (O)
3636	Pen1346 (D)	3723	T41 (E)	3825	X63 (O)
3638	PenA4 (M)	3724	T200 (A)	3830	XH1.5 (Q)
3641	PM1HL (M)	3726	TDD2A (M)	3831	XL2 (Q)
3642	PM1LF (M)	3727	TDD4 (M)	3832	XP2 (Q)
3643	PM2A (M)	3739	TX3-200 (M)	3833	XSG2.0 (Q)
3645	PM2DX (M)	3740	TX5-400 (M)	3834	XW2 (Q)
3647	PM22A (M)	3741	TZ2-300 (M)	3836	Z21 (O)
3648	PM24E (M)	3742	TZ20 (A)		

British Navy No.	Commercial Equivalent	British Navy No.	Commercial Equivalent	British Navy No.	Commercial Equivalent
NGT1	DPQ (C)	NR54	AP4 (M)	NR88	RL18 (M)
NGT2	GT1C (O)	NR55	4D1 (S)	NR94	ACP4 (D)
NGT4	GT1A (O)	NR56	D030 (M)	NR95	KT32 (O)
NR15	PM3 (M)	NR57	ML4 (O)	NS1	STV280/80 (O)
NR15A	PM4DX (M)	NR58	244V (M)	NS3	202 (O)
NR16	PM254 (M)	NR59	KT41 (O)	NS4	4713 (S)
NR16A	PM4DX (M)	NR60	H42 (O)	NS5	304 (O)
NR18	DEQ (C)	NR61	W42 (O)	NT18	D060 (M)
NR22	PM14 (M)	NR66	D41 (O)	NT20	PM256 (M)
NR23	PM14 (M)	NR67	X64 (O)	NT36	DA100 (O)
NR26	MHL4 (O)	NR68	6Q7 (A)	NT37	4033A (S)
NR27	ML4 (O)	NR69	EM35 (M)	NT38A	PZ1-75 (M)
NR27A	ML4 (O)	NR70	HP4101 (T)	NT39	ACT6 (F)
NR28	PM2 (M)	NR71	MS/Pen (C)	NT40	DET5 (O)
NR31	MH4 (O)	NR72	N43 (O)	NT58	DET12 (O)
NR35	PD220A (D)	NR73	ECC31 (M)	NT62	PM24D (M)
NR37	AC/SG (D)	NR74	AC6/Pen (D)	NT65A	PZ1-35 (M)
NR38	VMS4 (O)	NR75	2×ACP4 (D)	NT82	PM202 (M)
NR39	KT2 (O)	NR76	KTZ41 (O)	NU3	U12-14 (O)
NR41	21OVPT (C)	NR77	EL35 (M)	NU5	RX3-120 (M)
NR42	LP2 (O)	NR78	6C5 (A)	NU12	U18 (O)
NR43	PM24A (M)	NR79	Z62 (O)	NU13	U15 (O)
NR44	AC044 (M)	NR81	6K7 (A)	NU16	GU5 (O)
NR45	VMP4G (O)	NR82	X65 (O)	NU17	MU14 (O)
NR46	D41 (O)	NR83	6J7 (A)	NU18	U17 (O)
NR47	PX25 (O)	NR84	X41 (O)	NU20	5Y3 (A)
NR48	EBC33 (M)	NR85	6F6 (A)	NU31	MU2 (O)
NR49	EF36 (M)	NR86	KTW63 (O)	NU33	SU2150A (C)
NR50	AT4 (M)	NR87	AC5/PenDD (D)	NU34	HVR2 (M)
NR53	KT42 (O)				

R.A.F. No.	Commercial Equivalent	R.A.F. No.	Commercial Equivalent	R.A.F. No.	Commercial Equivalent
VGT121	T41 (D)	VR82	220TH (C)	VS70	7475 (M)
VGT128	GT1C (O)	VR83	210VPT (C)	VT20	220P (C)
VI77	EM31 (M)	VR91	EF50 (M)	VT23	230XP (C)
VI103	EM35 (M)	VR91A	EF50 (M)	VT25	DET25 (O)
VR18	215SG (C)	VR92	EA50 (M)	VT45	X56 (O)
VR19	PM2 (M)	VR95	954 (A)	VT50	HL2K (O)
VR21	210LF (C)	VR95A	954 (A)	VT51	Pen220A (D)
VR22	220PA (C)	VR99	X66 (O)	VT52	EL32 (M)
VR27	210LF (C)	VR100	KTW62 (O)	VT60	807 (A)
VR28	220VSG (C)	VR101	MHLD6 (O)	VT60A	807 (A)
VR32	220B (C)	VR102	BL63 (O)	VT61	RK34 (A)
VR35	QP21 (O)	VR105	ML6 (O)	VT61A	4074B (S)
VR37	MH4 (O)	VR106	9D2 (S)	VT62	TY1-50 (M)
VR38	MHL4 (O)	VR107	15D2 (S)	VT73	H63 (O)
VR40	PX25 (O)	VR108	8D2 (S)	VT74	6J7 (A)
VR41	PM12M (M)	VR109	4D1 (S)	VT75	KT66 (A)
VR43	210PG (C)	VR117	41MTL (C)	VT76	DA41 (O)
VR44	210DDT (C)	VR118	KT2 (O)	VT79	KT8 (O)
VR45	X56 (O)	VR119	DDL4 (C)	VT80	4307A (S)
VR46	PT25H (O)	VR122	41MXP (C)	VT81	4052A (S)
VR47	TZ05-20 (M)	VR123	EF8 (M)	VT88	832 (A)
VR49	210SPT (C)	VR124	HP4101 (T)	VT96	5B/502A (S)
VR53	EF39 (M)	VR125	MS/PenB (C)	VT104	PT15 (O)
VR54	EB34 (M)	VR126	4SH (C)	VT127	Pen46 (D)
VR55	EBC33 (M)	VR129	MS/Pen (C)	VU29	ESU150 (E)
VR56	EF36 (M)	VR130	HL23 (D)	VU39	MU14 (O)
VR57	EK32 (M)	VR136	EF54 (M)	VU39A	R3 (S)
VR59	955 (A)	VR137	EC52 (M)	VU64	U12-14 (O)
VR65	SP61 (D)	VR502	KT32 (O)	VU71	5U4 (A)
VR65A	SP41 (D)	VR503	KT33C (O)	VU72	GU5 (D)
VR66	P61 (D)	VR505	MH41 (O)	VU113	U17 (O)
VR67	6J5 (A)	VS68	STV280/40 (O)	VU120	SU2150A (C)
VR78	D1 (D)	VS69	STV280/80 (O)	VU134	HVR2 (M)

Conclusion

Here, for the moment at least, these notes must end. They have strayed here and there from the strict interpretation of the subject as defined in the title, but it is to be hoped that the digressions have been informative. It is also to be hoped that the experiments and constructional work suggested will be as interesting to the reader as the task of devising and trying them out has been to the writer. It is possible to build up many types of instrument from ex-service gear, and practically the only difficulty is the identification problem. There are petty snags by the thousands, of course. The work would not be as interesting without them.

An important aid to progress is the pooling of information by a group of workers. This, with some exchange of equipment, goes a long way towards solving the major problems.

A particular worry in home construction is the provision of chassis and case. Few firms advertise such items in these days of shortage of raw materials, but there are several who are willing to make up single orders without putting the price sky-high, and they offer the best source of supply. A good equipment deserves and needs a good setting.

A last lesson must be learnt. That is to examine the chassis in their complete form, and puzzle out why the design has been carried out in a certain way. Take, for example, the 'Monica' radar receiver. This is built on three chassis units, two being hinged at the panel so that they can be opened out, and the third fitting snugly between the others. The result is that all parts of the complicated but compact chassis are fully accessible. Without this system, it would have been impossible to fit a superhet receiver, power pack, pulse generator, delay line, and controls into a space measuring 8 in. x 9 in. x 18 in. All valves and components are full size, twenty valves being used.

To gain experience thus, and for many other reasons, it is far better to buy complete units than single components. The work of identification is a thousand times easier, and the cost is lower.

HAY & SON (Brighton) LTD.

129, North Street, Brighton, Sussex

(ESTABLISHED 1899)

230 volts AC/DC Fractional H.P. Motors (Made by Hoovers), Dimensions of casing 10" x 4" ... ... **29/6d.** Post and Packing **1/6d.**
5000 Genuine American Throat Microphones (New & Boxed) **5/9d.** Post free.
American Carbon Mikes on solid adjustable Bracket fitted with 2 way Quick Make & Brake Switch. ... **8/6d.** Post free. Limited quantity.
14 ft. Extending Sectional Copper Ariels. Ideal for Bungalows, Pre-fabs, Flats, etc. ... ... **12/6d.** each (with base). Post **1/6d.**
14 ft. Copper Extending Aeriels. Ideal for short wave cars etc. **7/6d.** Post **1/-.**
1000 Brand new Air Ministry H.F. Ampmeters, 5" Dial 0-10 amps. Bakelite case, panel mounting ... **7/6d.** each. Post **1/-** (Original cost **45/-** each).
Brand new Cine Motors 12 volt **10/6d.** each. Post free. (Limited quantity).
1000 G.P.O. Microphones Pillar Type (Complete with insets). A real snip ... ... **3/6d.** each, Post **9d.** each.
Microphone Transformers, New & Boxed **2/6d.** each. Post **6d.** 60 to 1 Ratio.
American Headphones. Featherweight. Low Resistance **9/6d.** } Post **1/-.**
" " " High " **14/6d.**
Army Signalling Morse Key & Buzzer, (Takes Pocket Lamp Battery), Mounted on metal base ... **4/11d.** Post **9d.** New & Boxed. Original cost **35/-.**

Prompt despatch & careful attention to all enquiries.

E. A. R. L.

The Electronic Applications Research Laboratory, with which Mr. D. W. Thomasson is closely associated, offers the facilities of its design and information departments to all interested in electronics.

The charges made are moderate, and the available data is extensive. Special attention is paid to the needs of amateur experimenters, but enquiries regarding any branch of electronics can be handled.

E.A.R.L. also offers specialised repair and servicing facilities capable of dealing with unusual problems.

Enquiries should be made to :—

EARL Services

Matford Avenue · Exeter

Tel: 4220

POST RADIO SUPPLIES

33 BOURNE GARDENS LONDON, E.4

Offer from Stock

COPPER INSTRUMENT WIRES. ENAMELLED, TINNED, COTTON AND SILK COVERED. LITZ WIRES. B.A. SCREWS, NUTS, WASHERS, SOLDERING TAGS, EYELETS AND RIVETS.

LAMINATED BAKELITE & EBONITE PANELS. TUFNOL AND EBONITE ROD. PAXOLIN type tubes and coil formers. All diameters.

Permanent detectors, crystals, headphones, etc., etc.

Send S.A.E. for List. Trade Supplied

Distributors of Bernard Publications.

Go to:

SMITH'S of Edgware Road

for the FINEST SELECTION of

GOVERNMENT & MANUFACTURERS SURPLUS RADIO MATERIAL

Not just a Few "SPECIAL LINES"

But EVERYTHING you need UNDER ONE ROOF!

H. L. SMITH & CO. LTD.,

Specialists in Radio Components since Broadcasting began

287-289, EDGWARE ROAD, W.2.

Phone: PAD 5891. ***Hours: 9 to 6 (Thurs. 1 o'clock)***

Near Edgware Road Met. and Bakerloo.

HENRY'S

Radio Component Specialists

We have the most comprehensive range of Radio Components of every nature.

Over 10,000 Valves in Stock.

Our reputation is your guarantee.

Situated opposite Edgware Rd. Tube.

If unable to call, please send stamp for current price list

(Dept. B.P.)

5, Harrow Road, W.2.

PADdington 1008/9.

WATCH OUR ADVERTS.

and secure

BARGAIN PRICES

We hold

LARGE STOCKS

of all

standard components which include

Electrolytic Condensers,

Speakers P.M.,

Mains Transformers,

Selenium Type Rectifiers,

Resistors,

Coils and Coil parts,

etc., etc.

If you cannot call

send for our 1948 Price List

Cash with order or C.O.D.

CHARLES BRITAIN

(RADIO) LTD.

11, UPPER SAINT MARTINS LANE, W.C.2

Telephone: TEMple Bar 0545.

Business Hours: 9 am. to 6 p.m.

Open all day Saturday.

Ex-Govt. Equipment

We have a large range of Ex-Govt. Radio and Radar Equipment which is eminently suitable for conversion to VHF ranges, or Television Construction, and will gladly send lists on receipt of a large stamped, addressed envelope.

U.E.I. Corp.,
The Radio Corner,
138, Grays Inn Road, London, W.C.1.
(Phone : TERminus 7937).
Open until 1 p.m. Saturdays. We are 2 mins. from High Holborn, 8 mins. from Kings Cross.

SAMSONS SURPLUS STORES

London's Largest Selection of Ex-Government Radio and Electrical Equipment

Communication Receivers, Radar Receivers, C. R. Units, Cable, P.A. Equipment, Test Meters of all Types, Valves, Components, Motors, Electrical Fittings.

Visit our Branches at
169-171, Edgware Road, W.2.
Tel. PAD 7851.
and
125, Tottenham Court Road, W.1.
Tel. EUS 4982.

LASKY'S RADIO

Ex-Government Radio and Radio Bargains

We have in Stock the Unit You Want.

RECEIVERS, RADAR INDICATORS, WAVE-METERS, CHARGERS, ALL TYPES OF COMPONENTS, ETC., ETC.

Write now for our Current Stock Bulletin, enclosing 2½d. stamp. Better still enclose 6d. and have our Bulletins sent to you every month. (Name and Address in Block Letters please).

IT WILL PAY YOU TO PAY US A VISIT.

LASKY'S RADIO (M.O. Dept. B.P.)
370, HARROW ROAD, PADDINGTON, LONDON, W.9.
(Opposite Paddington Hospital)

36 and 18b busses and 662 and 664 trolley busses pass our door.
Hours of Business : Monday to Saturday, 9.30 a.m. to 6 p.m.
Thursday half day, we close at 1 p.m.

BERNARDS RADIO BOOKS

FOR THE HOME & AMATEUR CONSTRUCTOR

4.	Radio Pocket Book	1/-
30.	Radio Valve Manual	3/6
37.	Manual of Direct Disc Recording ...	2/-
41.	Wireless Amplifier Manual	2/-
42.	Shortwave Radio Handbook	2/-
43.	Modern Radio Test Gear Construction ...	1/6
44.	Radio Service Manual	2/6
45.	Radio Reference Handbook	12/6
48.	Radio Coil and Transformer Manual ...	2/-
50.	International Shortwave Radio Station List	1/-
51.	Cathode Ray Oscilloscope Manual ...	2/-
52.	Radio Tuner Unit Manual	2/6
53.	Radio Constructors' Manual	3/-
54.	Radio Resistor Chart	1/-
55.	Handbook of Radio Circuits No. 2 ...	2/6
56.	Radio Aerial Handbook	2/6
57.	Ultra Shortwave Handbook	2/6
58.	Radio Hints Manual	2/6
59.	Television Constructors' Manual	3/6
60.	Radio Repairs Manual	2/6
61.	Amateur Transmitters' Construction Manual	2/6
62.	Car & Portable Radio Constructors' Manual	2/6
63.	Radio Calculations Manual	3/6
64.	Sound Equipment Manual	2/6
65.	Radio Designs Manual	2/6
66.	Communications Receivers' Manual ...	2/6
67.	Radio Valve Equivalents Manual	2/6
68.	Frequency Modulation Receivers' Manual	2/6
69.	Radio Inductance Manual	2/6
70.	Loudspeaker Manual	2/6
71.	Modern Battery Receivers' Manual ...	2/6
72.	Experimental Circuits Manual	2/6
73.	Radio Test Equipment Manual	2/6
74.	Radio Valve Applications Manual ...	5/-
76.	Radio Anti-interference Manual	2/6
77.	Walkie-talkie Construction Manual ...	2/6

Other Titles in Preparation

78. Radio and Television Laboratory Manual
79. Modernising Old Radios
80. Television Servicing Manual
81. Using Ex-Service Radio Apparatus
82. AC/DC Receiver Construction Manual
83. Radio Test Meters and their Construction